Electronic Services - Los Angeles
M12920X

Gould Inc.
Recording Systems Division

17-6500-00
OP-SV

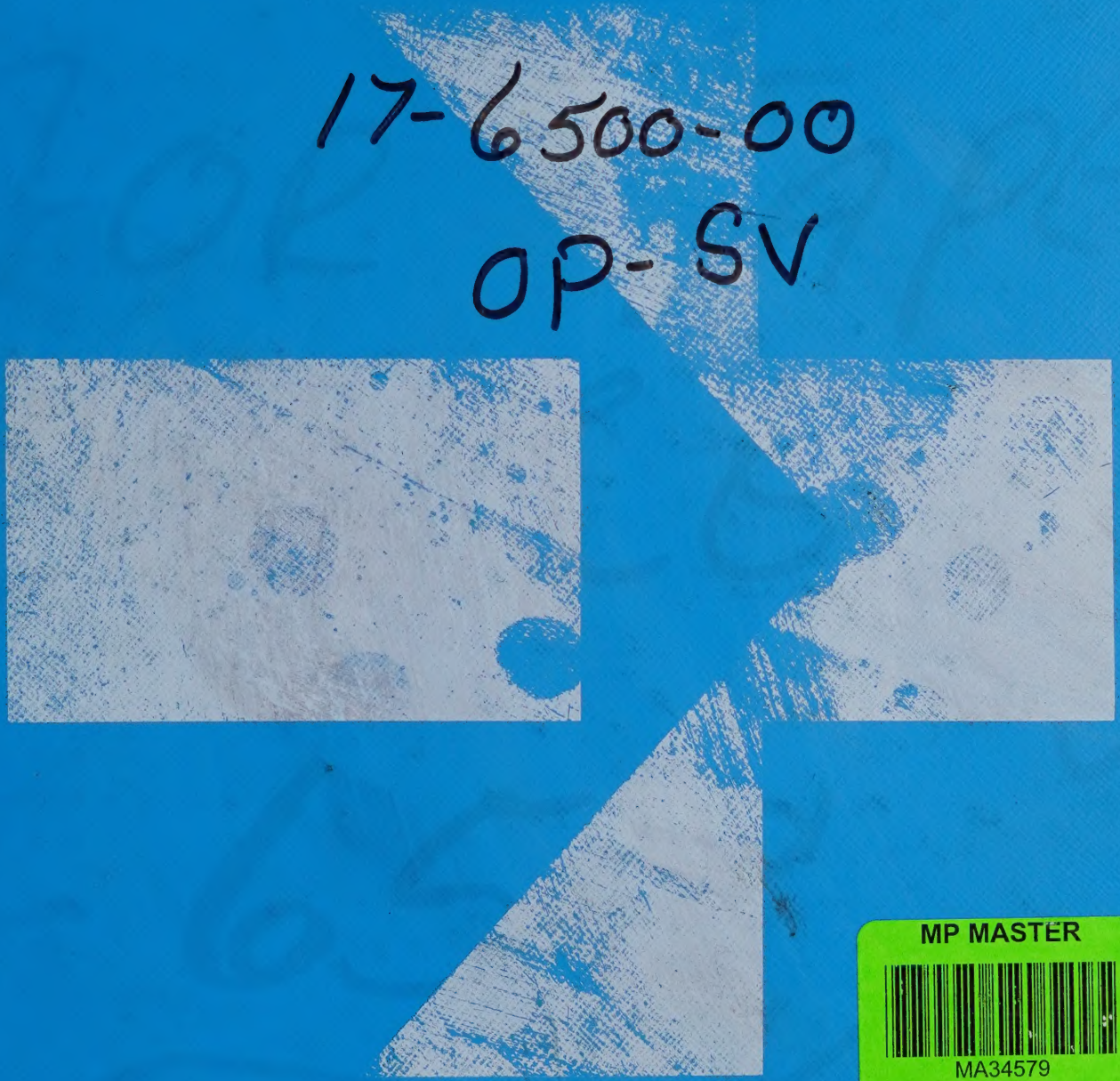

MP MASTER
MA34579

GOULD
Electronics

Operating and Service Manual

216 — 361 3315

GOULD
Electronics

GOULD
Electronics

MANUAL PART NO.
17-80650X-0X

GOULD PORTABLE INSTRUMENTATION RECORDER MODEL 17-6500-00 OPERATION AND MAINTENANCE MANUAL

The information contained herein is the exclusive property of Gould Inc., except as otherwise indicated and shall not be reproduced in whole or in part without explicit written authorization from the company. The distribution of this material outside the company may occur only as authorized by the company in writing.

All information contained in this manual is the latest product information available at the time of printing. The right is reserved to make changes at any time without notice.

PRINTED 3-83
COPYRIGHT 1981

Gould Inc., Recording Systems Division
3631 Perkins Avenue, Cleveland, Ohio 44114

FIRST PRINTING
PRINTED IN U.S.A.

Digitized by the Internet Archive
in 2025

https://archive.org/details/manualsplus_05843

WARRANTY

CURRENT EQUIPMENT:

The Gould Recording Systems Division's products as shown in the Current Equipment Catalog are warranted for a period of one year from date of shipment to original purchaser. They are warranted to conform to the applicable published specifications in effect at the time of shipment, and to be free from any defects in material or manufacture when used with recommended Gould associated equipment and Gould chart paper. LIABILITY OF THE GOULD RECORDING SYSTEMS DIVISION UNDER SUCH WARRANTY IS LIMITED TO SERVICING OR REPLACING DEFECTIVE PARTS EXCEPT PENS, STYLI, FUSES AND BATTERIES AND DOES NOT INCLUDE CALIBRATION AND MINOR MAINTENANCE AS OUTLINED IN GOULD OPERATING MANUALS. (Exceptions: The thermal pen in the 110 Strip Chart Recorder is guaranteed for life. The magnetic head assemblies in the Tape Recorder are warranted for 1000 hours of use or (1) one year from date of first shipment whichever occurs first.) IN NO EVENT SHALL THE GOULD RECORDING SYSTEMS DIVISION BE LIABLE UNDER ANY CIRCUMSTANCES, FOR ANY LOSS OF PROFITS OR OTHER CONTINGENT, CONSEQUENTIAL OR SPECIAL DAMAGES. Units are to be returned transportation prepaid by the buyer. The Gould Recording Systems Division will have the right of final determination of the cause and existence of a defect under this warranty. This warranty shall not apply to any products which have been subjected to misuse, improper installation, repair, alteration, neglect, accident, inundation, fire or operation outside their published maximum ratings. THE FOREGOING WARRANTY IS EXCLUSIVE AND EXPRESSLY IN LIEU OF ALL OTHER WARRANTIES WHETHER EXPRESSED OR IMPLIED, INCLUDING ANY IMPLIED WARRANTIES OF MERCHANTABILITY OR FITNESS AND OF ANY OTHER OBLIGATION AND SHALL CONSTITUTE THE SOLE REMEDY OF THE BUYER AND SOLE LIABILITY OF THE SELLER.

Gould offers an Extended Warranty Contract for all Recording Systems Division's products manufactured in the Cleveland Perkins' facility, along with calibration traceable to NBS. Please contact the Service Center listed below for details before your warranty expires.

REPLACEMENT PARTS: Same as above -- except ninety (90) days from date of shipment.

If a defect occurs:

1. Notify your nearest RSD Service Center (see below), giving full details of the difficulty, and include the model number, type number, and serial number. On receipt of this information, service data or shipping authorization and instructions will be forwarded to you.

2. On receipt of the shipping authorization, forward the instrument prepaid to location indicated on shipping authorization.

Compliance with the above procedure will assure the earliest repair and return of your equipment.

REFER TO REAR COVER FOR SERVICE CENTER LOCATIONS.

Gould instruments are individually tested and calibrated before shipment to assure dependability and verify their accuracy. To this procedure must be added an unseen ingredient of prime importance to you: The Gould concept of continuing service. Gould responsibility for each instrument sold covers far more than its delivery. Of equal concern is the equipment's suitability for its intended purpose, its correct installation, instruction of operating personnel -- plus future servicing and maintenance. The Gould Field Service Department offers customers any or all of these services:

Field Service

- o Installation
- o Field maintenance
- o NBS Certification

Training

- o Instruction of operators
- o On-site training seminars
- o Formal Training courses

Service Contracts

- o Fixed Fee
- o Time and Material
- o Extended Warranty

Our Seal of Pride Gould Inc., Recording Systems Division, and its predecessor organizations tracing back to Charles F. Brush, have been preeminent in instrumentation development since the 1920's. Among Gould's many achievements is a series of the world's best performing, most versatile, and reliable direct writing recording systems.

Today, Gould recorders and signal conditioners are the overwhelming choice for recording analog signals in the most critical industrial, scientific, and biophysical measurement applications. Whether recording the faintest life signals of a patient in a hospital operating room or the most critical variables in the lab or on the production line, you can depend on the accuracy, faithfulness, clarity, and permanence of the traces made by a Gould recorder.

Innovative design, coupled with highest quality, are hallmarks of all Gould products.

The Field Service Engineer Gould field service engineers provide on-the-spot assistance whenever and wherever it is required. While every field service engineer is the product of intensive and thorough factory training, you will find that his greatest strength evolves from field experience and his knowledge of your objectives. He is aware of your problems, is willing and able to assist you in their solution, and is backed by the nation's most experienced organization in recording instrumentation.

Our field service engineers and technicians are daily engaged in the installation, testing, maintenance, repair and inspection of Gould recording systems all over the country. They can provide you with any information about our instruments you may require; if not, they will find the answer to your problem.

Overhaul and Repair Because we service only our own products, our customers can feel confident of prompt, effective results when they turn to Gould Factory Service Centers.

The repair service these centers provide is of particular appeal to those companies that do not operate an instruments repair facility of their own. By designating the nearest Gould Service Center as its maintenance depot, a Gould-equipped company is assured the best chance for continuity of recording instrumentation.

Many companies with their own repair facilities find it more convenient and more truly economical to have their Gould equipment repaired by service contract with the closest Service Center. In addition to enjoying fast turn-around, these companies are spared the expense of carrying an inventory of recorder parts, accessories, and supplies.

Calibration and Certification A small, quiet room in the Standards and Calibration Section at the Gould plant in Cleveland contains precision reference standards just one step removed from the prime reference measurement standards of the United States - at the National Bureau of Standards in Washington. Included in this room which is temperature-controlled within one degree and has a constant relative humidity of 40%, are standards for voltage, frequency (derived from the atomic vibration of caesium), resistance, capacitance -- in fact all basic parameters of electrical measurement. The room is maintained under stabilized conditions 365 days a year.

The calibration practice of all Gould Service Centers is directly traceable to the National Bureau of Standards. We can supply complete calibration for any Gould equipment, and we can also certify to manufacturer's specifications followed by a letter of certification when required.

Training The Gould field service engineer will hold short training courses either on the job or at his facility. On-the-job training is usually a brief, informal session with the people who will actually be operating the Gould equipment.

Formal classroom training is more complete: detailed information, a thorough review of underlying theory, training devices, demonstration of problem solving and examination of students to determine their understanding and proficiency is accomplished at our Cleveland plant.

Contracts Customer companies requiring temporary or permanent service are afforded contract arrangements by which agreed-upon maintenance, repair, upgrading and calibration services are performed on a routine basis. Service contracts are now in effect with a number of customers, affording substantial savings in time and money.

Owing to the various requirements of each customer, we do not reproduce here a standard, boilerplate agreement -- which might contain too much or too little. Instead, we tailor each contract to a particular customer's needs. This practice has singlehandedly produced substantial savings in time and money for others; and it can do the same for you.

An extended warranty is available at the point of sale allowing a regulated budget for the first two years of ownership. You may take advantage of this warranty within the first year of ownership at a percentage of the current listed price.

SERVICE CENTERS

ATLANTA
RECORDING SYSTEMS DIVISION
1710 Wilwat Drive
Suite D
Norcross, Georgia 30093
Phone (404) 441-5556

BOSTON
RECORDING SYSTEMS DIVISION
129 Middlesex Turnpike
Burlington, Massachusetts 01803
Phone: (617) 272-0750

BAY AREA (CA)
RECORDING SYSTEMS DIVISION
25936 Eden Landing Road
Hayward, CA 94545
Phone: (415) 887-1300

CHICAGO
RECORDING SYSTEMS DIVISION
1550 East Higgins Road
Suite 122
Elk Grove Village, Illinois 60007
Phone: (312) 640-4380

CLEVELAND
RECORDING SYSTEMS DIVISION
3631 Perkins Avenue
Cleveland, Ohio 44114
Phone: (216) 361-3315

DAYTON
RECORDING SYSTEMS DIVISION
4668 Gateway Circle
Kettering, Ohio 45440
Phone: (513) 433-9586

DENVER
RECORDING SYSTEMS DIVISION
1500 West Hampden Avenue
Unit 1C
Englewood, Colorado 80110
Phone: (303) 781-4473

DETROIT
RECORDING SYSTEMS DIVISION
32307 Mally Road
Madison Hts., Michigan 48071
Phone: (313) 588-4024

HOUSTON
RECORDING SYSTEMS DIVISION
10500 Northwest Freeway
Houston, Texas 77092
Phone: (713) 680-1121

LANHAM, MD
RECORDING SYSTEMS DIVISION
6301 Ivy Lane Suite 106
Greenbelt, Maryland 20770
Phone: (301) 345-0050

LOS ANGELES
RECORDING SYSTEMS DIVISION
16310 Arthur Street
Cerritos, California 90701
Phone: (213) 404-1919

ORLANDO
RECORDING SYSTEMS DIVISION
772 Northlake Avenue
Altamonte Springs, Florida 32701
Phone (305) 830-0695

PHILADELPHIA
RECORDING SYSTEMS DIVISION
1 Great Valley Parkway East Suite 6
Great Valley Corporate Center
Malvern, Pennsylvania 19355
Phone: (215) 647-2214

PITTSBURGH
RECORDING SYSTEMS DIVISION
Campbells Run Road
Parkway West
Pittsburgh, Pennsylvania 15205
Phone: (412) 923-2160

SADDLEBROOK
RECORDING SYSTEMS DIVISION
74 Kenney Place
Saddle Brook, New Jersey 07662
Phone: (201) 845-0220

SEATTLE
RECORDING SYSTEMS DIVISION
The Commons Bldg. Suite C-155
1200 112th Avenue NE
Bellevue, Washington 98004
Phone: (206) 453-8100

TORONTO
ALLAN CRAWFORD ASSOC., LTD
6503 Northam Drive
Mississauga, Ontario, Canada
Phone: 678-1500

EUROPE

GOULD INSTRUMENTS S.A.F.
57 rue St. Sauveur 91160
Ballainvilliers, France
Phone: 011-33-6-934-1067

GOULD BRYAN INSTRUMENTS LTD.
Willow Lane
Mitcham, Surrey CR4-4UL, England
Phone: 01-640-3490

GOULD INSTRUMENTS GMBH
Dieselstrasse 5-7
D-6453 Seligenstadt,
West Germany
Phone: 06182-3107

TABLE OF CONTENTS

Section			Page
	LIST OF TABLES		v
	LIST OF ILLUSTRATIONS		vii
I	GENERAL INFORMATION		1-1
	1-1	Introduction	1-1
	1-2	Purpose and Scope	1-1
	1-3	Related Manuals	1-1
	1-4	Safety Precautions	1-1
	1-5	System Description	1-1
	1-6	Physical Description	1-1
	1-7	Functional Description	1-3
	1-8	Main Control Panel and Control PWB	1-4
	1-9	Switch Assembly	1-4
	1-10	Switch Logic Switch Assembly and PWB	1-4
	1-11	Footage Counter and Display PWB	1-5
	1-12	Reel Motor Assembly	1-5
	1-13	Reference Oscillator PWB	1-6
	1-14	Bias Mixer and Bias Driver PWB	1-6
	1-15	Preamplifier PWB	1-6
	1-16	Capstan Motor Tachometer Assembly	1-6
	1-17	Capstan Servo Assembly	1-6
	1-18	Tension Sensing Assembly	1-7
	1-19	Power Supply	1-7
	1-20	Standard Plug-In Modules	1-7
	1-21	Calibrator Module	1-7
	1-22	FM Record/Reproduce Module	1-8
	1-23	Direct Record/Reproduce Module	1-8
	1-24	Audio Module	1-8
	1-25	Remote Control Unit	1-8
	1-26	Specifications	1-9
	1-27	Magnetic Tapes and Reels	1-14
	1-28	Type and Size	1-14
	1-29	Reel Type and Size	1-14
	1-30	Special Tools and Test Equipment	1-15
	1-31	Accessories	1-15

TABLE OF CONTENTS (CONT)

Section			Page
II	INSTALLATION AND SHIPMENT		2-1
2-1	Introduction		2-1
2-2	Installation		
2-3		Unpacking	2-1
2-4		Mounting and Installation	2-1
2-5		Rack Mounting	2-2
2-6		Installation and Removal of Modules	2-2
2-7	Preparation for Shipping		2-4
2-8	Conversion (1/4" to 1/2" or 1/2" to 1/4")		2-5
2-9		120V/220V Conversion	2-5
2-10		Tools	2-5
2-11		Procedure	2-6
III	OPERATION		3-1
3-1	Main Panel Control and Indicators		3-1
3-2	Location and Use of Main Panel Controls and Indicators		3-1
3-3	Location and Use of Modules, Controls, and Indicators		3-8
3-4	Pre-Operational Maintenance Procedures		3-8
3-5		Demagnetizing Heads	3-8
3-6		Cleaning Tape Path	3-17
3-7		Tape Handling	3-18
3-8		Tape Storage	3-18
3-9		Tape Environmental Requirements	3-19
3-10	Mounting Tape Reels and Threading Magnetic Tape		3-19
3-11		Tape Loading and Threading	3-19
3-12		Procedure for Recorder Model 6507 (8 in. Reels of 1/2 in. Tape)	3-19
3-13		Tape Threading Procedure	3-21
3-14		Procedure for Recorder Models 6504 and 6508 (7 in. diameter Reels of 1/4 in. Tape)	3-22
3-15	Dismounting Tape		3-22
3-16	Operation Procedures		3-25
3-17		Standard Start-up and Operating Sequence	3-25
3-18	Operation - General Comments		3-25
3-19		Restricted Modes	3-25
3-20		Change of Mode	3-25

TABLE OF CONTENTS (CONT)

Section			Page
IV	THEORY OF OPERATION		4-1
	4-1	Introduction	4-1
	4-2	Control Module	4-1
	4-3	Switch Assembly	4-6
	4-4	Switch Logic Assembly	4-7
	4-5	Speed Logic	4-9
	4-6	Footage Counter Display PWB	4-9
	4-7	Reel Motor Assembly	4-10
	4-8	Reference Oscillator Assembly	4-7
	4-9	Reference Signals	4-7
	4-10	Bias Mixer PWB	4-20
	4-11	Preamplifier PWB	4-20
	4-12	Bias Driver	4-20
	4-13	Capstan Motor Tachometer	4-20
	4-14	Capstan Servo Assembly	4-25
	4-15	Tension Sensing Assembly	4-30
	4-16	Power Supply Assembly	4-31
	4-17	Calibrator Module	4-34
	4-18	FM Module	4-34
	4-19	Record Circuitry	4-34
	4-20	Reproduce Circuitry	4-35
	4-21	Direct Record/Reproduce Module	4-40
	4-22	Record Section	4-40
	4-23	Reproduce Section	4-40
	4-24	Audio Module	4-43
	4-25	Record Circuitry	4-43
	4-26	Reproduce Circuitry	4-43
V	PREVENTIVE MAINTENANCE		5-1
	5-1	Introduction	5-1
	5-2	Scope	5-1
	5-3	Maintenance Checks	5-1
	5-4	Power Supply Check	5-2
	5-5	Switch Function and Indicator Lamps Check	5-2
	5-6	Tension Sensor Adjustment Check	5-3
	5-7	Brake Torque Adjustment Check	5-4
	5-8	Pinch Roller Adjustment Check	5-6
VI	CALIBRATION		6-1
	6-1	Introduction	6-1
	6-2	Control Logic Operation Test	6-1
	6-3	Transport Tape Tracking Checkout	6-5
	6-4	Transport Servo Gain Potentiometer Adjustment	6-5
	6-5	Counter Idler Test	6-13

TABLE OF CONTENTS (CONT)

Section			Page
VI	6-6	Tape Lock Adjustment	6-19
	6-7	Decade Operation Adjustment	6-20
	6-8	Conversion from English to Metric Display	6-21
	6-8A	Conversion from Metric to English Display	6-21A
	6-9	Dynamic Skew Adjustment	6-23
	6-10	Time Base Error Adjustment	6-25
	6-11	Flutter Adjustment	6-28
	6-12	Remote Control Logic Operation Test	6-32
	6-13	FM Module Calibration	6-32
	6-14	Direct Module Calibration	6-32
	6-15	Audio Module Calibration	6-32
VII	DIAGNOSTICS AND TROUBLESHOOTING		7-1
	7-1	Introduction	7-1
	7-2	Localizing Recorder/Reproducer System Problems	7-1
	7-3	Diagnostic and Troubleshooting Procedures	7-2
	7-3A	No Power to Equipment	7-2
	7-3B	No Function Selection	7-3
	7-3C	Function Selected, Command Not Released	7-3
	7-3D	Transport Mechanical Check	7-5
	7-3E	Incorrect Operation of Capstan Motor	7-6
	7-3F	Fast Wind Modes Run Uncontrolled	7-7
VIII	ASSEMBLY/DISASSEMBLY WITH PARTS LIST		8-1
	8-1	Introduction	8-1
	8-2	Scope	8-1
	8-3	Removal of Protective Covers	8-2
	8-4	Removal of Heads and Tape Drive Components	8-5
	8-5	Removal of Power Supply	8-7
	8-6	Removal of Servo/MDA Module	8-9
	8-7	Removal of the Display PWB Assembly	8-9
	8-8	Removal of the Reel Amplifier PWB, Left and Right	8-9
	8-9	Removal of Bias Mixer, Bias Driver, and Reference Oscillator PWBs	8-13
	8-10	Removal of Capstan Motor Assembly	8-13
	8-11	Removal of the Preamplifier Card Cage	8-15
	8-12	Removal of Left and Right Reel Drive Motors with Brake Assembly	8-18
	8-13	Removal of the Up/Down Switch Logic PWB Assembly and the Control PWB Assembly	8-18
	8-14	Removal of the Footage Counter Module	8-18
	8-15	Parts Listing	8-20
IX	DIAGRAMS		
	9-1	Introduction	9-1
	9-2	Diagram List	9-1

LIST OF TABLES

Table	Title	Page
1-1	Table of Leading Characteristics	1-9
1-2	Table of Environmental Characteristics	1-14
1-3	Fuse Requirements	1-14
2-1	Tape Track Mounting Slot Assignments	2-3
3-1	Main Panel Controls and Indicators	3-3
3-2	Rear Panel Indicators and Connectors	3-7
3-3	FM Record/Reproduce Module Front Panel Controls, Connectors, and Indicators	3-10
3-4	Direct Record/Reproduce Module Front Panel Controls, Connectors, and Indicators	3-13
3-5	Audio Record/Reproduce Module Front Panel Controls, Connectors, and Indicators	3-15
3-6	Startup and Operating Procedures	3-26
4-1	Control PWB Commands	4-4
4-2	Control PWB Input and Output Requirements	4-6
4-3	Speed Logic	4-13
4-4	Speed Display	4-13
4-5	Mode Logic	4-19
4-6	Frequency Relationship to Operation	4-19
4-7	Capstan Servo Signal Processing	4-30
4-8	Capstan Servo Assembly Speed Logic	4-30
4-9	Tape Tension	4-31
4-10	Record Section Performance	4-38
4-11	Bandwidth (Hz)	4-38
4-12	Carrier Frequency Response (kHz)	4-39
4-13	Reproduce Section Performance	4-39
4-14	FM System Performance (E to E Mode)	4-40

LIST OF TABLES (CONT)

Table	Title	Page
6-1	Calibration Sequence	6-2
6-2	Test Equipment Required	6-2
6-3	Control Logic Operation Test	6-3
6-4	Tape Speed Display Readings	6-23
6-5	Dynamic Skew Vs. Speed	6-25
6-6	Time Base Error	6-30
6-7	Flutter Adjustment	6-31
7-1	Faults List	7-2
7-2	Control Logic	7-4
8-1	Options and Accessories	8-20
8-2	Major Assemblies 1/4" Configuration	8-21
8-3	Major Assemblies 1/2" Configuration	8-22

LIST OF ILLUSTRATIONS

Figure	Title	Page
1-1	6500 Series Portable Instrumentation Recorder	1-2
2-1	Power Conversion Card Positions	2-7
3-1	Main Panel Controls and Indicators	3-2
3-2	Rear Panel Indicator, Connector and Fuse Locations	3-6
3-3	FM Record/Reproduce Module	3-9
3-4	Direct Record/Reproduce Module	3-12
3-5	Audio Record/Reproduce Module	3-14
3-6	Demagnetizing Heads	3-16
3-7	Reel Drive Hub - Model 6550 (For 8 in. Reels of 1/2 in. Tape)	3-20
3-8	Reel Drive Spindle - Models 6504 and 6508 (For 7 in. Reels of 1/4 in. Tape)	3-23
3-9	Threading Magnetic Tape	3-24
4-1	System Block Diagram	4-2
4-2	Control Module Block Diagram	4-5
4-3	Switch Logic Assembly Block Diagram	4-8
4-4	Reel Amplifier Assembly Block Diagram	4-11
4-5	Footage Counter and Display Block Diagram	4-14
4-6	Reel Motor Assembly Block Diagram (Sheets 1 and 2)	4-16
4-7	Reference Oscillator Assembly Block Diagram	4-18
4-8	Bias Mixer PWB Block Diagram	4-21
4-9	Preamplifier PWB Block Diagram	4-22
4-10	Bias Driver PWB Block Diagram	4-23
4-11	Capstan Motor Tachometer Assembly Block Diagram	4-24
4-12	Capstan Servo Assembly Block Diagram (Sheets 1,2, and 3)	4-27, 4-28, 4-29
4-13	Power Supply Assembly Block Diagram (Sheets 1 and 2)	4-32, 4-33

LIST OF ILLUSTRATIONS (CONT)

Figure	Title	Page
4-14A	FM Module Record Circuit Block Diagram	4-36
4-14B	FM Module Reproduce Circuit Block Diagram	4-37
4-15A	Direct Module Record Section Block Diagram	4-41
4-15B	Direct Module Reproduce Section Block Diagram	4-42
4-16	Audio Assembly Block Diagram	4-44
5-1	Brake Torque Measurement	5-5
5-2	Pinch Roller Pressure Measurement	5-7
6-1	Up/Down Switch Logic PWB Components Location Diagram	6-4
6-2	Transport Tape Tracking Adjustment Test Setup Block Diagram	6-6
6-3	Reference Oscillator PWB Components Location Diagram	6-7
6-4	Rear Card Cage Test Point, Switch, and Potentiometer Locations	6-8
6-5	Preamplifier PWB Components Loction Diagram	6-9
6-6	Preamplifier Interconnect PWB Components Location Diagram	6-10
6-7	Record/Bias Mixer PWB Components Location Diagram	6-11
6-8	Bias Driver PWB Components Location Diagram	6-12
6-9	Servo MDA PWB Components Loaction Diagram	6-14
6-10	Reel Amplifier PWB Components Location Diagram	6-15
6-11	Control Logic PWB Components Location Diagram	6-16
6-12	Footage Counter PWB Components Location Diagram	6-18
6-13	Display PWB Components Location Diagram	6-22

LIST OF ILLUSTRATIONS (CONT)

Figure	Title	Page
6-14	Dynamic Skew Adjustment Test Set-up Block Diagram	6-24
6-15A	Time Base Error Adjustment Test Set-up Block Diagram	6-26
6-15B	Time Base Error Adjustment Test Set-up Block Diagram	6-27
6-16	Flutter Adjustment Test Set-up Block Diagram	6-29
6-17	Tachometer Preamplifier PWB Components Loction Diagram	6-33
6-18	FM Record/Reproduce Module PWB Components Location Diagram	6-34
6-19	Direct Module PWB Components Location Diagram	6-35
6-20	Audio Module PWB Components Location Diagram	6-36
6-21	Output Stage, Calibrator PWB Components Location Diagram	6-37
6-22	Linear Input, Calibrator PWB Components Location Diagram	6-38
6-23	Digital Calibrator PWB Components Location Diagram	6-39
6-24	Calibrator Attenuator PWB Components Location Diagram	6-40
6-25	Card Cage I.C. Components Layout Diagram	6-41
8-1	Septum and Head Cover Attaching Screw Locations	8-4
8-2	Recorder Assembly Locations (Front) with Front Cover Removed	8-6
8-3	Record Assembly Locations (Rear) with Rear Cover Removed	8-8

LIST OF ILLUSTRATIONS (CONT)

Figure	Title	Page
8-4A	Recorder Subassembly Locations (Left Side)	8-10
8-4B	Recorder Subassembly Locations (Right Side)	8-11
8-5	Recorder Subassembly Locations (Rear) with Servo/MDA and Power Supply Modules Removed	8-14
8-6	Recorder Subassembly Locations (From Top)	8-16
FO-1	Schematic Diagram, UP/DOWN Switch Logic	9-5
FO-2	Schematic Diagram, Preamplifier Card Cage I/C (Sheets 1 and 2)	9-7
FO-3	Schematic Diagram, Head Switch	9-11
FO-4	Schematic Diagram, Preamplifier PWB	9-13
FO-5	Schematic Diagram, Bias Driver	9-15
FO-6	Schematic Diagram, Reference Oscillator	9-17
FO-7	Schematic Diagram, Record/Bias Mixer	9-19
FO-8	Schematic Diagram, Servo/MDA Module (Sheets 1, 2, and 3)	9-21
FO-9	Schematic Diagram, Control Logic PWB	9-27
FO-10	Schematic Diagram, Reel Amplifier PWB	9-29
FO-11	Schematic Diagram, Footage Counter PWB	9-31
FO-12	Schematic Diagram, Display PWB (Sheets 1 and 2)	9-33
FO-13	Schematic Diagram, D.C. Switching Power Supply	9-37
FO-14	Schematic Diagram, Interconnect Diagram, Power Supply	9-39
FO-15	Schematic Diagram, Reel Motor Assembly	9-41
FO-16	Schematic Diagram, Capstan Motor/Tach Preamplifier	9-43

LIST OF ILLUSTRATIONS (CONT)

Figure	Title	Page
FO-17	Schematic Diagram, Audio Module	9-43
FO-18	Schematic Diagram, FM Record/Reproduce Module (Sheets 1, 2 and 3)	9-47
FO-19	Schematic Diagram, Direct Module (Sheets 1 and 2)	9-53
FO-20	Schematic Diagram, Calibrator Attenuator	9-57
FO-21	Interconnect Diagram, Calibrator Module	9-59
FO-22	Schematic Diagram, Output Stage, Calibrator (Sheets 1 and 2)	9-61
FO-23	Schematic Diagram, Linear Input, Calibrator	9-65
FO-24	Schematic Diagram, Digital, Calibrator (Sheets 1 and 2)	9-67
FO-25	Schematic Diagram, Voltage Regulators, Power Supply	9-71
FO-26	Schematic Diagram, Card Cage I/C	9-73
FO-27	Schematic Diagram, Tension Sensor	9-75
FO-28	Schematic Diagram, FM Filter and Discriminator	9-77
FO-29	Schematic Diagram, DC Preregulator	9-79
FO-30	Schematic Diagram, Switch PWB-RCU	9-81
FO-31	Schematic Diagram, RCU Logic (Sheets 1, 2, and 3)	9-83
FO-32	Schematic Diagram, RCU Front Panel PWB (Sheets 1, 2 and 3)	9-89

SECTION I.

GENERAL INFORMATION

1-1. INTRODUCTION

1-2. Purpose and Scope

This manual provides a complete discussion of the Gould 6500 Series Portable Instrumentation Recorder, hereinafter referred to as the Gould 6500, its operation, and maintenance. The information presented is intended to give a knowledgeable technician the data necessary to operate, calibrate, troubleshoot, and maintain the recorder to the subassembly level.

1-3. Related Manuals

The Gould 6500 Series Portable Instrumentation Recorder Operator's Guide provides the operator oriented information necessary to familiarize the user with the functions and use of the recorder. It includes the descriptions of all controls and indicators, standard operating procedures and instructions for mounting and removing the tape reels and threading the magnetic tape.

The Gould Calibrator Module Instruction Manual provides all procedures necessary for the calibration of all modules, FM, Direct, Audio, and the basic recorder circuitry. The Gould Remote Control Unit (RCU) Manual provides all procedures necessary to operate the 6500 System from a remote location.

1-4. Safety Precautions

- Remove power from the recorder when any disassembly procedure is performed.
- During calibration of any module when the recorder's power is required to be on, be cautious of open circuitry.
- Observe anti-static procedures when removing or installing any modules at the recorder. Use anti-static bags or packing when storing or shipping modules to protect IC packages from electrostatic discharge damage. Refer to paragraph 2-7.a. in Section II for detailed anti-static procedures.

1-5. SYSTEM DESCRIPTION

1-6. Physical Description

The Gould 6500 is shown in Figure 1-1. The recorder consists of a two tape transport configurations, Model 6504 and 6508 (1/4 inch) and Model 6507 (1/2 inch); a set of 4 or 8 record/reproduce heads; control modules; a power supply; and controls and indicators.
As shown in Figure 1-1 all of the controls and indicators, displays, tape reels and tape path components are accessible from the front of the recorder.

The system is housed in a ruggedized chassis which can be mounted in a standard 19 inch rack when the metal cover is removed. The chassis also provides eight mounting slots for the addition of record/reproduce modules which enable the operator to change the recorder to various recording operations. Modules and assemblies that make up the recorder are:

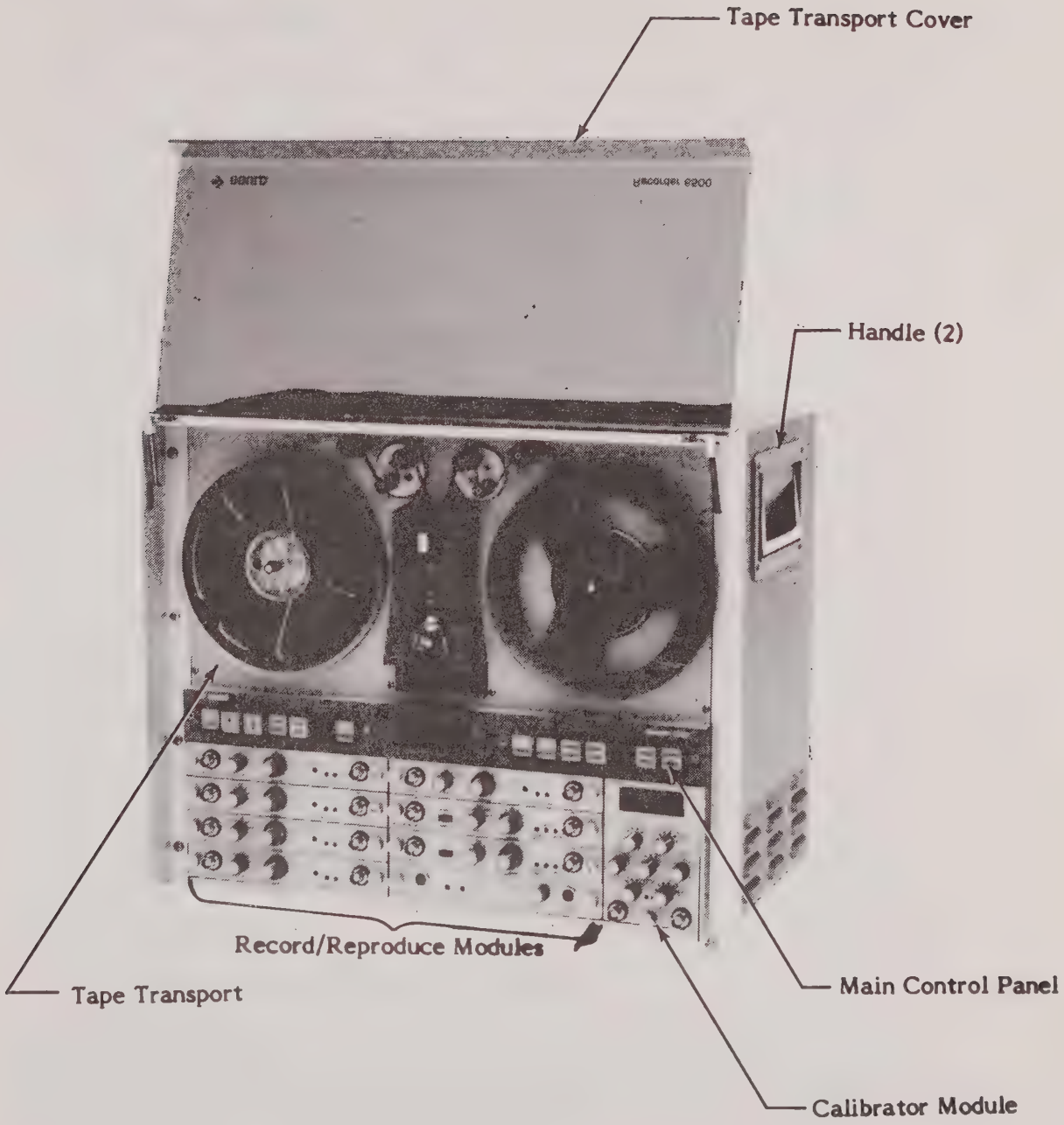

Figure 1-1. 6500 Series Portable Instrumentation Recorder

a. Basic Recorder

1. Control Logic PWB
2. Switch Assembly
3. Switch Logic Assembly and PWB
4. Footage Counter and Display PWB
5. Reel Motor Assembly
6. Reference Oscillator PWB
7. Bias Mixer and Bias Driver PWB
8. Preamplifier PWB
9. Capstan Motor Tachometer Assembly
10. Capstan Servo Assembly
11. Tension Sensing Assembly
12. Power Supply Assembly

b. Options

1. Calibrator
2. FM Record/Reproduce Module
3. Direct Record/Reproduce Module
4. Audio Module
5. Remote Control
6. 1/4" to 1/2" or 1/2" to 1/4" Conversion.

1-7. Functional Description

The major features of the 6500 recorder are shown in the Summary of Major Features list below.

Summary of Major Features

- 16 hours of continuous FM, Direct, and audio recording.
- Heavy mainframe and precision plate for precise tape handling
- Choice of: Decade speeds 37.5, 3.75, and 0.375 for 1:10:100 Time Base Expansion or IRIG 15/32 through 30 ips
- FM squelch output

- Calibrator module
- Crystal controlled capstan servo
- Digital footage counter
- Modular construction, low MTTR
- Lightweight, compact, less than 50 lbs.
- 1/4 inch or 1/2 inch tape
- Remote Control
- Low, Intermediate, or wideband I Record/Reproduce electronics
- Universal power input
- Shuttle capability (utilizing the Remote Control Unit)

The function of each module or assembly is as follows:

1-8. Main Control Panel and Control PWB

This module provides the means of selecting and initiating desired record/reproduce or tape movement operations. The circuitry contained by this module also ensures that tape handling is properly performed even in those instances when erroneous or conflicting commands are given. The following operations are controlled by this module: ERASE, RECORD, FAST (forward), FAST (reverse), DRIVE (forward), DRIVE (reverse), and STOP.

1-9. Switch Assembly

Seven indicating pushbutton switches mounted on the control panel provide the operator with the means to initiate, either singly or in combination, any of the above recorder operations. Indicating lamps in the control switches are illuminated to indicate operational status.

1-10. Switch Logic Assembly and PWB

This assembly contains seven indicating pushbutton switches (on the left side of the main control panel) and logic circuitry to provide the operator with a means of:

a. Selecting tape speed

b. Selecting the type of information (footage count or tape speed) presented by the LED display (see footage module description)

c. Selecting the type of tape servo synchronization signal to be used

d. Resetting the footage count to zero (0)

e. Turning primary power (recorder) on and off

This switch assembly acts as a switching interface for the control of the above functions. With the exception of speed selection, the controls provide on/off signals to other modules of the basic unit.

Two speed selection pushbuttons are used to increment or decrement a special speed counter. This counter provides a 4-bit code for each selectable tape speed; seven IRIG speeds and three decade speeds.

1-11. Footage Counter and Display PWB

The Footage Counter PWB is used together with an LED display to form a digital (4-digit) display system. This system can present tape speed or tape footage in either English or Metric units.

The measurement system used (English or metric) is selected by two switches located on the display module, and re-positioning of the footage counter sensing unit. The measurement system mode selection switch is positioned at the factory prior to shipment.

Tape footage: This is the amount of tape moved during the current operation and may be expressed in feet (0 to 9999) or meters (0 to 999.9) depending on the desired measurement system. The counter operates bi-directionally; the count is advanced (incremented) during forward movement and is decremented during reverse (rewind) movement.

Tape speed: Can be expressed in any of ten possible values, seven IRIG speeds or three decade speeds. The value may be expressed as either inches-per-second (ips) or centimeter-per-second (cmps) depending on the desired measurement system. Speed information is received in 4-bit binary code form from the unit's logic switch assembly.

The information, footage count or tape speed, displayed by the LED display is determined by a pushbutton control (DSP) located on the logic switch assembly. When this control is on (i.e. depressed) tape speed is displayed; when the switch is in the (out position) footage count is displayed. However, when tape speed is changed and the footage count is being displayed, the newly selected speed will be displayed automatically for one second.

1-12. Reel Motor Assembly

This assembly consists of two dc reel drive motors, a reel brake assembly, and a PWB which contains the circuitry to control the operation of the reel motors and the reel brake solenoid.

The actual movement of tape (bi-directional) between the supply and takeup reels is provided and controlled by this assembly. Primary operational control inputs are received from the control module, tape tension sensors, and the turnaround idler.

1-13. Reference Oscillator PWB

This assembly contains a crystal-controlled oscillator and frequency divider to produce the following reference signals:

a. IRIG/Decade tape speed

b. Record

c. Record Bias

d. Servo

1-14. Bias Mixer and Bias Driver PWB

This printed wiring board contains the bias mixer and driver circuits needed to interface between the input (record) circuit of a standard plug-in module and the record head.

1-15. Preamplifier PWB

This printed wiring board contains the amplifiers needed to interface between the recorder's read (reproduce) head and the reproduce (output) circuits of a standard plug-in module. the amplifiers provide a +60dB gain in signal strength.

1-16. Capstan Motor Tachometer Assembly

This assembly provides the capstan servo assembly with a control signal that varies in frequency directly in proportion to the rotational speed of the capstan.

This assembly consists of the capstan, a capstan drive motor, an optical disc, light sources and photo diode pickups, and a preamplifier.

1-17. Capstan Servo Assembly

The primary function of this assembly is to control the rotational speed of the capstan to move tape past the read/write heads at the selected tape speed.

This assembly contains the circuitry that:

a. Determines the operation to be performed

b. Determines the tape speed and direction

c. Controls the capstan rotational speed to ensure the accurate movement of tape.

d. Selects the type of servo reference signal, tachometer (TACH) or tape track (TAPE) to be used in controlling the capstan speed.

1-18. Tension Sensing Assembly

This Assembly provides the means to maintain constant tape tension during operation. This assembly also contains the End-of-Tape (EOT) sensor.

1-19. Power Supply

This module provides all of the dc voltages required by the recorder's electronics and electromechanical equipment. The power supply output voltages include: +16 Vdc PWR, ±12 Vdc PWR, ±10 Vdc RECORD, ± 10 Vdc ELECT, +5 Vdc ERASE. All output voltages except the +16 Vdc output have short circuit protection and thermal overload protection.

Power supply characteristics:

a. Input: 1.5 amperes at 120 Vac, 60 Hz

b. Output ripple voltage, 6 millivolts RMS maximum

c. Inverter switching spikes, 100 millivolts peak-to-peak maximum

1-20. STANDARD PLUG-IN MODULES

Modules provide recording and reproducing using frequency modulation (FM), direct (DIR), audio, and pulse code modulation (PCM) techniques.

The circuitry contained by each type of record/reproduce plug-in module is housed in a rectangular metal chassis 7 inches wide, 8-1/2 inches long and 1-1/8 inches high.

Each record/reproduce module can be plugged into any of the eight mounting slots provided in the front of the recorder. Except for 1/2" track 8 which is only for Audio.

The front panel of each type of record/reproduce module is provided with two retaining thumbscrews, two BNC type connectors (input and output) and applicable controls and indicators.

A PC-type connector at the rear of each module provides all needed signal and power connections except for the signal input and output (front panel connectors).

The details of each type of available record/reproduce module are given in the following paragraphs.

1-21. Calibrator Module

The Calibrator Module provides all the necessary functions to calibrate the Gould 6500. The calibrator has three sections. The first and second sections are the measurement sections. These sections provide digital and linear measurement circuitry. The third section of the calibrator is the output section providing

two basic functions. These functions are the waveform and the FM carrier generator. DC voltages required for calibrating are provided by a DC source located on the Digital PWB.

1-22. FM Record/Reproduce Module

This module operates with the electronics provided in the basic Gould 6500 to enable inputs to be recorded onto and reproduced from magnetic tape using frequency-modulation techniques.

The record circuitry contained by this module conditions input signals, converts them to an FM form and develops the carrier frequency required for the desired record tape speed. The output of this circuitry is sent to the record electronics contained in the recorder (i.e. mixer, driver, and record head).

The reproduce circuitry in this module receives an FM signal from the reproduce head and preamplifier of the recorder. The module reproduce circuitry filters the input signal, demodulates it and conditions it for output. The reproduce circuitry has three filter networks each of which is designed to handle the carrier frequency used for only one of the ten tape speeds. The filters then limit the reproduce capability of each FM module to the reproduction of only those signals which were recorded at three specific tape speeds.

The filters that determine which signals can be reproduced are plug-in units. The reproduce characteristics of an FM record/reproduce module can be easily changed by simply replacing the filters which it contains with ones that have the desired characterisitics.

1-23. Direct Record/Reproduce Module

This Module is designed to provide the Gould 6500 with the capability of recording and reproducing direct data in the IRIG intermediate band at any of seven tape speeds.

The record section accepts signals and drives the recording heads.

The reproduce section accepts signals from the Preamplifier PWB, processes them according to speed, and presents them at the output.

1-24. Audio Module

This module provides the Gould 6500 with the capability of recording audio information for logging purposes. The audio module utilizes a low impedance microphone input and provides a headphone output for retrieval of the audio signal.

1-25. Remote Control Unit

The Remote Control Unit (RCU) provides the capability of operating the 6500 recorder from a location as far away as 50 feet (15.2 m). It also adds the capabilities of two additional automatic codes of operation - shuttle playback and serpentine recording. The RCU operation and maintenance is covered in the Gould Remote Control manual.

Table 1-1. Table of Leading Characteristics (Cont)

Item	Characteristics
Speed Logic	A four-bit code which consists of one binary/decade bit and three speed bits.
Output Signals	
AC Waveform Generator	Waveforms Sine Triangular Wave Squarewave
Frequency Range	15 Hz to 150kHz
Output Level	Adjustable from 0 to 1.3 Vrms
Distortion Signal	
Sine Wave	15.12 kHz ± 0.5%
Harmonics	2nd 0.3% 3rd 0.1%
Precision DC Voltage	Adjustable for 0 to 1.5 Vdc
FM Carrier Generator	
Output Level	0 - 10V Squarewave
Frequency Accuracy	± 0.5%
DC Mode	
Range	± 1.5 Vdc
Accuracy	± 5mV
AC Vrms Mode	
Voltage Range	10mVrms to 1.3 Vrms
Accuracy	50 Hz to 20 kHz: ± 5% or 10mV 15 Hz to 150 kHz: ± 10% or 20mV

Table 1-1. Table of Leading Characteristics (Cont)

Item	Characteristics
dB Mode	
Range	+3dB to -55dB with 0.0dB set for 1 Vrms
Accuracy	± 1dB to ± 3.5dB
3rd Harmonic Distortion	
Measurements	
Range	0.5% to 3.0%
Accuracy	± 20%
Frequency Counter	
Range	15 Hz to 150 kHz
Minimum Input Level	100mVrms
Accuracy	± 0.5% or ± 3 digits
FM Record/Reproduce Module	
Size	8-1/2" Width 7" Depth 1/-1/8" Height
Weight	1 lb. 8 oz. max.
Input Requirements	
Supply Voltages	+10V (± 50mV) -10V (± 50mV) +10V (± 200mV) (Record only) -10V (± 200mV) (Record only) +5V (± 300mV)
Supply Current	+10V - 120mA -10V - 120mA +10V - 20mA (Record only) -10V - 15mA (Record only) +5V - 70mA

Table 1-1. Table of Leading Characteristics (Cont)

Item	Characteristics
Speed Logic	A four-bit code which consists of one binary/decade bit and three speed bits.
Record Section Performance	
Input Sensitivity	0.1Vrms to 10Vrms ± 40% Deviation
Output Level	1Vrm square wave
Reproduce Section Performance	
Input Sensitivity	150mVrms min. to 450mVrms max. at 3-3/4 ips Intermediate Band. Levels are proportional at other speeds.
Frequency Response	± 0.5dB from DC to the top of the bandwidth
DC Drift	± 1% for each 10°C change from +5°C to 50°C ambient
Output Level	1 Vrms into a 75 ohm load
FM System Performance (E to E Mode)	
Linearity	± 0.3% of full deviation from +50°C to +50°C ambient
Harmonic Distortion	Max. 0.5% for frequencies up to 1/3 of the bandwidth
Signal-to-Noise Ratio	-55dB
Direct Record/Reproduce Module	
Size	8-1/2" Width 7" Depth 1-1/8" Height
Weight	1 lb.
Input Requirements	
Supply Voltages	+10V (± 50mV), -10V (± 50mV), +10V (± 50mV) (Record only), -10V (± 50mV), +5V (± 300mV)

Table 1-1. Table of Leading Characteristics (Cont)

Item	Characteristics
Supply Current	+10V - 40mA -10V - 30mA +10V - 20mA (Record only) -10V - 10mA +5V - 30mA
Speed Logic	A four-bit code which consists of one binary/decade bit and three speed bits
Record Section Performance	
Input Sensitivity	0.1Vrms to 10Vrms for normal recording level
Reproduce Section Performance	
Input Sensitivity	10mV to 2.0V depending on speed and signal frequency
Frequency Response	± 3dB from 100 Hz to 150 kHz exclusive of head bumps at 30 ips tape speed.
Output Level	1Vrms into a 75 ohm load

Table 1-2. Table of Environmental Characteristics

Item	Characteristics
Operation	+5°C to +50°C
Non-Operating	-20°C to +60°C
Static	Requires protection of modules to prevent electrostatic discharge damage to ICs.

Table 1-3. Fuse Requirements

Type	Size
3 AG	3 Amp

1-27. MAGNETIC TAPES AND REELS

1-28. Type and Size

Use only high quality instrumentation tape (3M 888 or Ampex 797). For Recorder Models 6504 and 6508 use 1/4" tape; for Recorder Model 6550 use 1/2" tape.

1-29. Reel Type and Size

For Recorder Models 6504 and 6508 use 1/4" by 7", diameter NAB plastic reels with 5/16" diameter hubs.

For Recorder Model 6550 use 1/2" by 8" diameter instrument precision reels with NAB standard hub.

1-30. SPECIAL TOOLS AND TEST EQUIPMENT

Special Tools

None required

Test Equipment

Voltmeter (AC/DC)
Oscilloscope

1-31. ACCESSORIES

Description	Model Number
Calibration Module for FM and Direct Record/ Reproduce Module - 7 instrument functions	11-6401-40
Remote Control Unit, includes Serpentine Recorder and Shuttle Playback modes (less interface cable)	11-6401-32
10-Ft Remote Control Interface Cable	11-6401-33
25-Ft Remote Control Interface Cable	11-6401-34
50-Ft Remote Control Interface Cable	11-6401-35
Transit Case, Sturdy Aluminum Case with handles	11-6401-47
Rack Slides for 19-in. wide rack	11-6401-48
Erase Head 1/4 in. 4-track or 8-track.	11-6401-41
Conversion Kit converts 1/4-in. 8-track unit to 1/2-in. 7-track unit. Includes Record/Reproduce head stacks, reel hubs, 1 empty reel and 1 reel of tape (field convertible)	11-6401-37
AC Power Supply; Spare; 110/220±10% VAC, 48-440 Hz	11-6401-00
DC Power Supply; Spare; 11-16 VDC	11-6401-02
Extender Card for Record/Reproduce Module	11-6401-42
Extender Card for Calibrator Module	11-6401-51
Extender Card for Reproduce Preamp and Bias Mixer Boards	11-6401-52
Extender Card for Head Switch Board	11-6401-53
Extender Card for Bias Driver and Reference Oscillator Boards	11-6401-54
Bulk Tape Degausser for 1/4 and 1/2 in. width tape; 110 VAC 50-60 Hz	295875
Bulk Tape Degausser for 1/4 and 1/2 in. width tape; 220 VAC 50-60 Hz	295880

SECTION II.

INSTALLATION, SHIPMENT AND CONVERSION (1/4" to 1/2"; 1/2" to 1/4")

2-1. INTRODUCTION

The information provided in this section covers all procedures for receiving, installation, storage, shipping and converting the Gould 6500 from 1/2" to 1/4" and back. The successful operation of the Gould 6500 depends on proper handling. Although the recorder is constructed on a ruggedized chassis, certain precautions must be observed to prevent needless defects due to mishandling or inadequate protection.

2-2. INSTALLATION

2-3. Unpacking

Unpacking should be accomplished carefully in an area that takes into consideration protection from electrostatic discharge (refer to paragraph 2-7.a.1). All parts, accessories, and options delivered should be accounted for and checked for shipping damage.

2-4. Mounting and Installation

CAUTION

Failure to provide adequate ventilation may seriously impair the proper operation of the Gould 6500.

When mounting the Gould 6500 either in a rack or on a bench, be sure that adequate ventilation is provided. For proper ventilation to occur, two conditions must be observed.

a. When rack mounting the Recorder, the rack itself must be properly ventilated. Adequate separation between the recorder and other equipment, cables, and internal rack structures must be provided to allow the Power Supply to be properly cooled.

b. When the Recorder is to be mounted or used on a bench, the ventilation ports must not be obstructed by other equipment, or paperwork.

2-5. Rack Mounting

The Gould 6500 is designed to allow for rack mounting. By removing the external covers, rack installation is possible. Rack mounting and installation should proceed as follows:

a. Remove the wraparound cover and the rear cover. (Refer to paragraph 8-3.e. and f.)

b. The recorder may now be installed in a standard rack by sliding the recorder onto the rails until it locks in place.

c. To remove the recorder from the rack, slide the recorder out from the rack pushing the rack stops to release the recorder from the rails.

d. Replace the covers (wraparound and rear) and the recorder is ready for bench operation or shipment.

2-6. Installation and Removal of Modules

This paragraph provides a description of installation and removal of all plug-in modules and any required cabling for the proper operation of each module. Removal and installation of standard recorder subassemblies such as the tape transport are provided in Section VIII, Assembly/Disassembly, with parts list.

Any adjustments required in the installation of modules is provided. These adjustments, when required, are only for just-out-of-the-box installation before power is connected. The tape track mounting slot assignments are provided in Table 2-1.

CAUTION

Recorder power should always be turned "OFF" when installing and removing modules.

Table 2-1. Tape Track Mounting Slot Assignments

The tape track/mounting slot assignments for an 8-channel recorder are:

Track 1	Track 2	
Track 3	Track 4	Calibration
Track 5	Track 6	Module
Track 7	Track 8	

The tape track/mounting slot assignments for a 4-channel recorder are:

Unused	Track 2	
Unused	Track 4	Calibration
Unused	Track 6	Module
Unused	Track 8	

a. Installation - To install a module into an available mounting slot in the Gould 6500, proceed as follows:

1. Be sure the POWER switch is "OFF."

2. Check the mounting slot area to make sure that no obstructions such as loose wiring or debris is in the way.

3. Slowly and smoothly slide the module into the slot. Make sure that the module edges are properly engaging the mounting rails on each side. If binding occurs remove module, check for damaged rail, and repeat.

4. When the module stops due to the modules pins engaging the connector inside the recorder, firmly press the module further into the slot until the pins and the connector have engaged properly. The module should be squarely mounted into the slot and the front plate will be flush with the face of the recorder.

5. Turn the knurled mounting screws located at each side of the module, either by hand or with a screwdriver to firmly lock the module in place. **Do not over-tighten.**

b. Removal - To remove a module from the 6500 Recorder, proceed as follows:

1. Be sure the POWER switch is "OFF."

2. Loosen the mounting screws either by hand or with a screwdriver.

3. Using the captive mounting screws as handles, slowly but firmly pull the module from the recorder. When the pins and connector disengage, the module should slide out of the mounting slot easily.

4. Store the module in the container it was shipped in, if possible, and take electrostatic discharge precautions as per paragraph 2-8.a.

2-7. PREPARATION FOR SHIPPING

When preparing the Gould 6500 or individual modules for shipping, certain requirements must be adhered to in order that adequate protection be provided for the recorder and its individual components. This paragraph provides instructions for the proper inspection, packing, and shipment of the recorder and its modules.

a. Shipment of Individual Modules

Plug-in modules are of a size and shape that makes shipping easy as they do not require a very large container. There are, however, some considerations which must be taken so as to provide adequate protection for these modules.

1. Static Protection - In order to provide protection of modules and subassemblies of the 6500 recorder from electrostatic discharge (ESD), the following precautions must be observed.

   a) Shipping and receiving areas should be anti-static in nature or have an anti-static bench for packing and unpacking static sensitive components, modules, and subassemblies.

   b) When installing the recorder, be sure that personnel tools, benches, and racks are sufficiently grounded to prevent ESD.

   c) Do not use polyethelene bags to store or ship recorder subassemblies.

   d) When modules are not in use, store them in static resistant (conductive) bags or containers.

   e) Never dismantle a module in a room with a rug on the floor, unless the rug is made with conductive fibers or ionized air is present in the facility.

2. Packing - Individual modules or subassemblies must be packaged in a manner that will ensure protection from moisture, sudden shock, and vibration.

b.) Shipment of the Recorders.

The Gould 6500, as a unit, should be shipped in an appropriate container to ensure the same protection. A conductive foam lined trunk of sturdy construction is recommended.

2-8. CONVERSION (1/4" to 1/2" or 1/2" to 1/4")

This procedure is detailed in the instructions included as a part of the conversion kit, P/N 11-6401-37.

2-9. 120V/220V Conversion

The information in this procedure is organized in a step-by-step arrangement so that a qualified technician can make this conversion without prior knowledge of the 6500 Series Recorder. All necessary diagrams are referenced to augment this procedure and to clarify the various operation required.

2-10. Tools

1-Needle noise pliers for removal of power conversion card.

2-11. Procedure

WARNING

Turn off the recorder power card from the primary (facility) power source receptable. Failure to do this will result in injury or death.

1) On the right rear panel of the recorder, locate the power supply.

2) Remove the power cord from the 3-prong receptable next to the fuse. (See Figure 3-2).

3) Slide clear plastic fuse cover to the left exposing the fuse and the power conversion card.

4) Locate fuse pull lever and push it to the left causing the fuse to slide free of the fuse receptable. Remove the fuse and set aside for re-use.

CAUTION

Do not grasp the power conversion card on any of the brass contacts. Grasp only by the insulated portion.

NOTE

When the power conversion card is located, the number 120 can be read right side up. (See figure 2-1).

5) Locate the power conversion card below the fuse receptable. Using the needle nose pliers, grasp the card gently and pull it straight out and free of the recorder.

6) Rotate the power conversion card and flip it over so the number 220 can be read right side up. (See figure 2-1).

7) With the needle nose pliers, grasp the power conversion card (observing the above caution) and gently but firmly replace it in its holder below the fuse.

NOTE

When the power conversion card is properly replaced in the recorder, the number 220 can be read right side up.

8) Replace the fuse (use 2 Amp, 250V) and slide the clear protective cover to the right.

9) Replace the power cord and 220V facility power may now be used to operate the recorder.

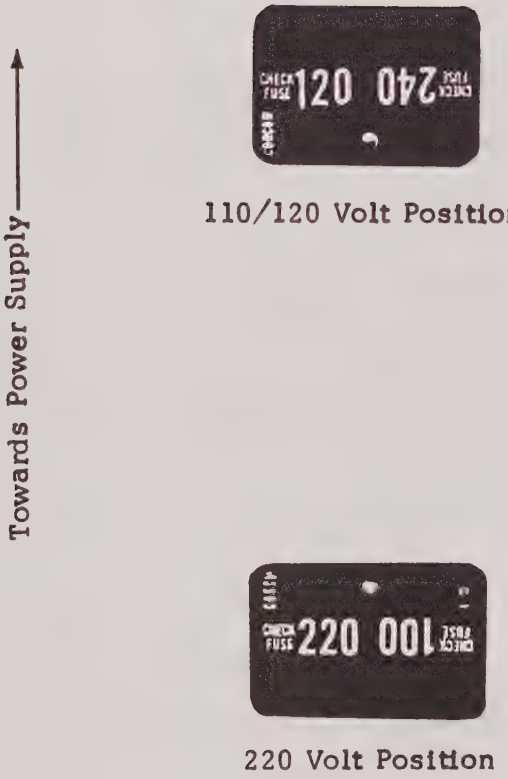

Figure 2-1. Power Conversion Card Positions

SECTION III.

OPERATION

3-1. MAIN PANEL CONTROLS AND INDICATORS

All controls and indicators, except for those on the power supply, are located on the front panel of the tape recorder and the plug-in modules. Their functions are explained in the following paragraphs.

NOTE

The information presented here may also be found in the Gould 6500 Operator's Guide. They have been repeated here with additional information for convenience.

3-2. LOCATION AND USE OF MAIN PANEL CONTROLS AND INDICATORS

The locations of the controls, indicators, and the numeric (LED) display on the recorder's main panel are shown in Figure 3-1. Descriptions of the control functions are in Table 3-1. Figure 3-2 and Table 3-2 show the locations and give the functional description of the rear panel indicators and connectors.

The recorder has fourteen indicating-type pushbutton control switches. The operator uses these to control the following functions:

- Application of power
- Selection of tape speed and direction
- Initiation of record, replay, or erase operations
- Stop

Each switch pushbutton contains a lamp which is illuminated when the function controlled by the switch is active.

A four-digit LED display on the front of the recorder displays either the currently selected tape speed or the tape footage count. The information displayed is selected by the DSP control switch.

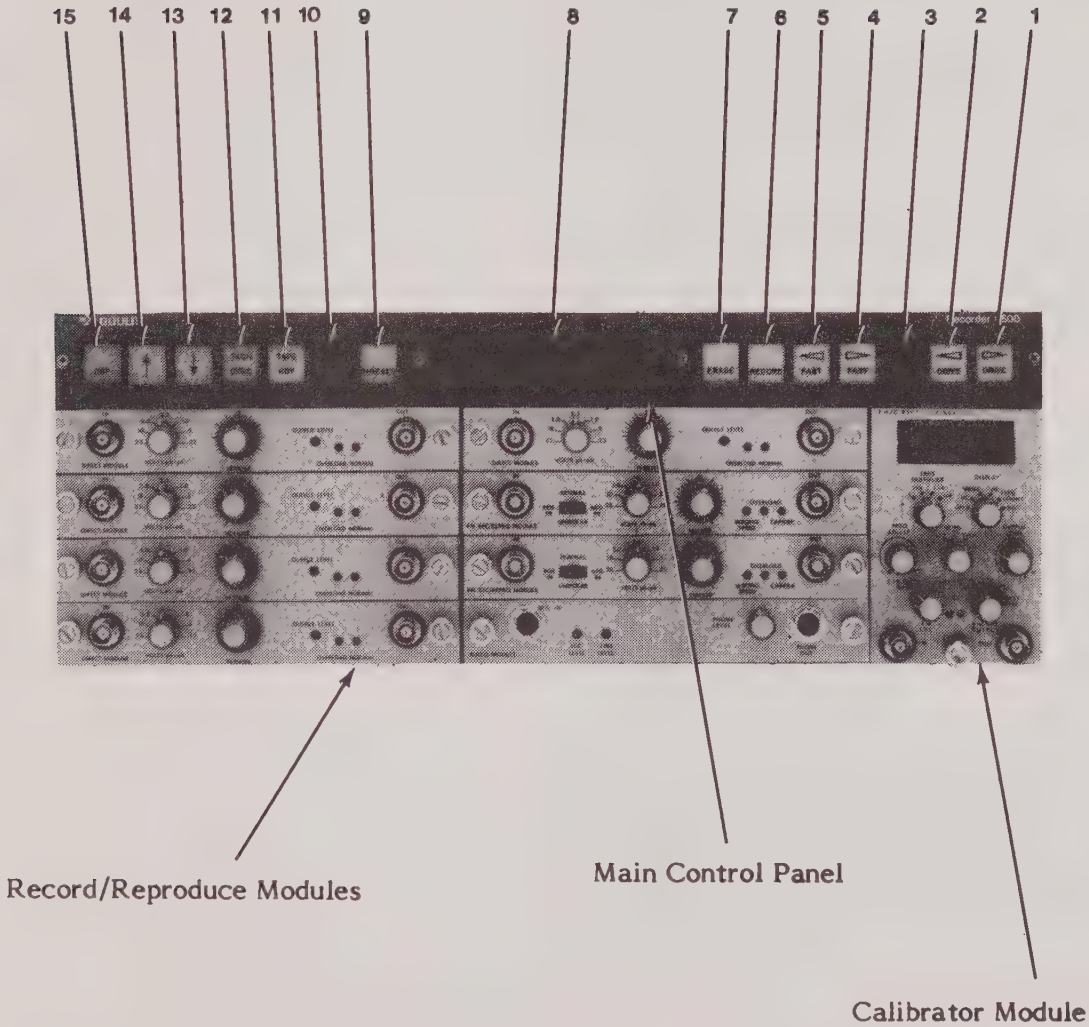

See Table 3-1 for Control Descriptions

Figure 3-1. Main Panel Controls and Indicators

Table 3-1. Main Panel Controls and Indicators

Fig.3-1 Ref. No.	Label or Description	Control Function
1.	▷ DRIVE	Forward Tape Drive Switch. When depressed, this switch causes the tape to be moved from left to right at the currently selected speed.
2.	◁ DRIVE	Reverse Tape Drive Switch. When depressed, this switch causes the tape to be moved from right to left at the currently selected speed.
3.	STOP (red)	Stop Switch. When depressed, this switch stops the execution of the current operation.
4.	▷ FAST	Fast Forward Switch. When depressed, this switch causes the tape to be moved left-to-right at high speed (180 ips).
5.	◁ FAST	Rewind Switch. When depressed, this switch causes the tape to be moved right-to-left at high speed (180 ips).
6.	RECORD	Record Switch. When depressed together with either DRIVE switch, this switch selects the Record mode. The RECORD switch will **not** function if pressed while the recorder is executing a high speed tape movement (fast forward or rewind).
7.	ERASE	Erase Switch. When depressed while the recorder is in Record mode (see 6 above), this switch initiates a tape erase operation. The ERASE switch will **not** function if pressed while the recorder is executing a high-speed tape movement (fast forward or rewind). (See Note below).

NOTE

The ERASE switch controls the operation of an erase head which is an option for the Gould 6500 Recorder (not installed on every recorder). If your recorder is not equipped with an erase head, pressing the ERASE switch will have no effect. The switch will illuminate and the recorder will stay in Record mode.

Table 3-1. Main Panel Controls and Indicators (Cont)

Fig.3-1 Ref. No.	Label or Description	Control Function
8.	Display Panel	Four-Digit LED Display. The display panel presents either the currently selected tape speed or the current footage count. The DSP control switch (see 15 below) is used to change the information displayed.
9.	P/RESET	Preset/Reset Switch. This switch has two functions: when depressed momentarily, it resets the footage counter and the displayed count to zero; when held in for one second, it enters a footage count from a remote control unit. (The Remote Control Unit is an optional accessory for the Gould 6500.)
10.	POWER ON (Green)	When depressed, this switch applies primary operating power to the recorder.
11.	TAPE RDY	Tape Ready Switch. When depressed, this switch causes the recorder's servo system to be synchronized with an input read from a pre-recorded, dedicated, tape sync track. The TAPE RDY indicator lights as soon as the tape sync input signal is available to the servo system.
12.	TACH SYNC	Tachometer Synchronization Switch. When depressed, this switch causes the recorder's servo system to be synchronized with the sync output of the recorder's tachometer. The TACH SYNC indicator is lit whenever the servo system is running in synchronization with **either** the tachometer output or a sync signal read from a dedicated tape track.

NOTE

The TAPE RDY and TACH SYNC control switches are mechanically interlocked; when one is depressed, the other automatically moves to its outer position.

Table 3-1. Main Panel Controls and Indicators (Cont)

Fig.3-1 Ref. No.	Label or Description	Control Function
13.	↓	Tape Speed Decrease Switch. Each time this switch is pressed and released, the tape speed selected is changed to the next slower speed.
14.	↑	Tape Speed Increase Switch. Each time this switch is pressed and released, the tape speed selected is changed to the next faster speed.
15.	DSP	Display Switch. This switch controls the type of information that appears on the LED display panel. When the switch is in the depressed position, tape speed is displayed; when in the outmost position, footage count is displayed.

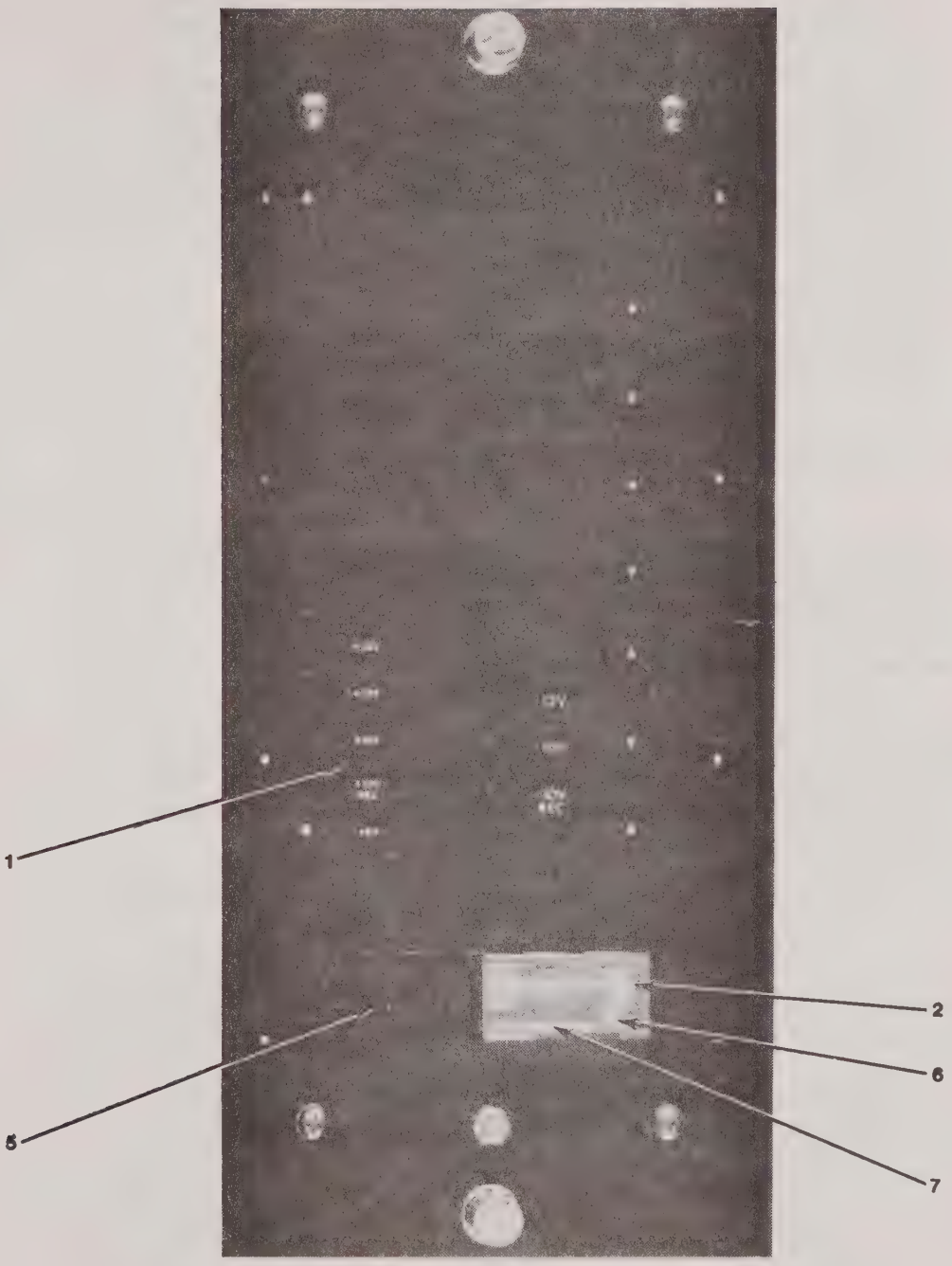

See Table 3-2 for Rear Panel Descriptions

Figure 3-2. Rear Panel Indicator, Connector and Fuse Locations

Table 3-2. Rear Panel Indicators and Connectors

Fig. 3-2 Ref. No.	Label or Description	Control Function
1.	Power Supply Voltage Diagnostic Indicators	When lit, these LEDs indicate that the power supply is functioning properly to provide all necessary voltages for the recorder's operation. Positive voltage indicators (+16V, +12V, +10V, +10V REC, and +5V) light red, and negative voltage indicators (-12V, -10V, and -10V REC) light green. All indicators except the + and -10V REC LEDs light as soon as power is applied to the recorder. REC (recording) voltage indicators light only when the recorder is functioning in the Record mode.
2.	Fuse	Provides circuit protection for the power supply.
3.	TAPE SIG (not shown) IN	Tape Servo Signal Input Jack. When the recorder operates in the tape servo mode (recorder operation synchronized with a signal recorded on tape), the output cable from the tape servo channel is connected to this jack.
4.	RCD REF (not shown) OUT	Record Reference Signal Output Jack. When using the recorder in the tape servo mode, connect a cable between this jack and the input cable jack of the tape servo channel.
5.	Power Plug	3-prong connector for facility power hookup.
6.	Fuse Pull	Used for removing the fuse.
7.	Power Conversion Card	Provides conversion from 120 VDC to 220 VDC (Refer to paragraph 2-9 for procedure).
8.	BNC Panel (not shown)	As an option, the BNC panel allows access to all record/reproduce tracks from the rear of the recorder.

3-3. LOCATION AND USE OF MODULES, CONTROLS, AND INDICATORS

The locations of the modules, controls, and indicators are shown in Figures 3-3, 3-4, and 3-5. Explanation of the control functions are in Table 3-3, 3-4, and 3-5. For explanation of the Calibrator and Remote Control (RCU) modules refer to the Calibrator and RCU module manuals.

3-4. PRE-OPERATIONAL MAINTENANCE PROCEDURES

The 6500 Series Instrumentation Recorder has been designed to provide a highly reliable system with a minimum of maintenance. The instructions given in this subsection will help maintain optimal operational performance of the equipment if applied on a regular basis.

3-5. Demagnetizing Heads

Tape head demagnetizing or degaussing for the 6500 is a simple operation. However, if the procedure is not done properly, the tape heads may be left with more residual magnetism than they had originally. Figure 3-6 illustrates head demagnetizing.

General requirements are as follows:

- Remove reels from the transport.
- To prevent scratching the heads, be sure the degausser tip is protected with a plastic cap.
- All operations with the degausser must be performed with deliberate slow motions. Erratic or abrupt motions may increase rather than decrease head magnetism.
- Use a commercially available head demagnetizer with a narrow head.
- Be sure to keep tools that contain iron away from the tape heads and the tape threading paths.

a. Cover the degausser tip. If a protective cap is not available, use masking tape or a similar material as protection.

b. Turn recorder POWER switch to "OFF".

c. Remove the septum (procedures in Section VIII, Assembly/Disassembly).

d. Connect the degausser to a 110-120 volt A-C power source. Be sure the degausser is kept several feet from the recorder during Power On and Power Off.

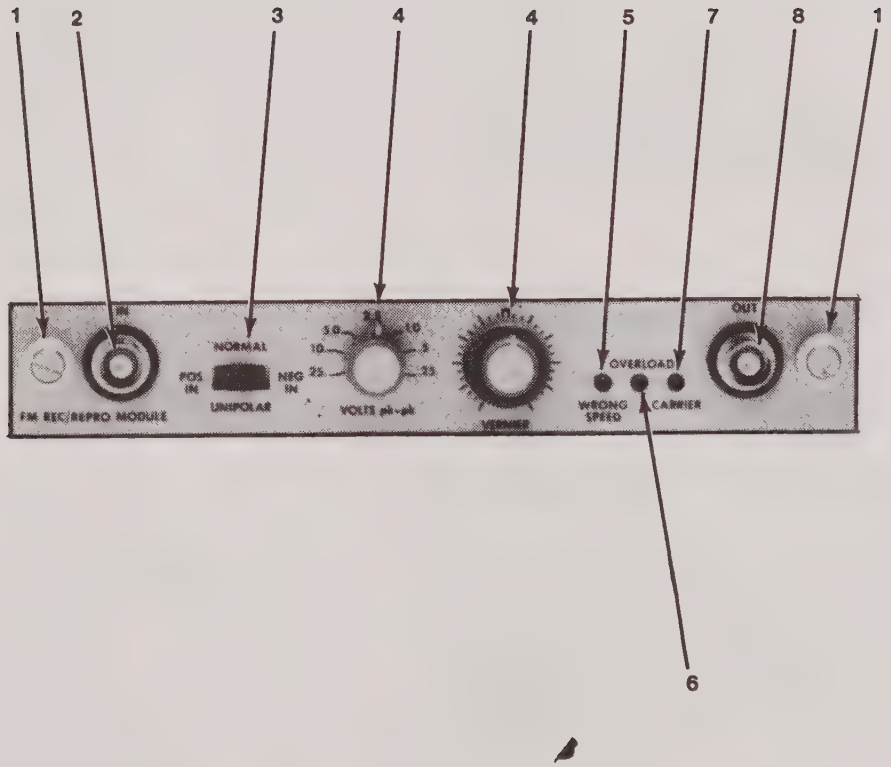

See Table 3-3 for Control Descriptions.

Figure 3-3. FM Record/Reproduce Module

Table 3-3. FM Record/Reproduce Module Front Panel Controls, Connectors, and Indicators

Fig. 3-3 Ref. No.	Label or Description	Function
1.	Module Screw Clamps	Screws are loosened or tightened when a module is removed from or reinstalled in the recorder housing. Keep screws finger-tight while the module is in use. **CAUTION** **Turn off power to the recorder before removing or reinstalling any record/reproduce module.**
2.	IN	Input Cable Jack. Connect a cable from the input signal source to this jack.
3.	UNIPOLAR	Signal Polarity Switch. This switch is set according to the polarity of the input signal. When a signal is bipolar, set the switch at NORMAL, when negative, set it at NEG IN, and when positive, set it at POS IN.
4.	INPUT DB (+1V REF)	Input Attenuator Switches. Switches are used in conjunction with the OVERLOAD indicator (See 6 below) to adjust the level of the input signal. The left switch, for coarse adjustment, in Controls VOLTS peak-peak the right switch, for fine adjustment, is labled VERNIER.
5.	WRONG SPEED	Wrong Reproduction Speed Indicator. When lit (red), this LED indicates that the recorder speed selected is not one of the three speeds at which FM signal reproduction is set to function. The indicator goes out when a correct speed is selected.
6.	OVERLOAD	Input Overload Indicator. When lit (red), this LED indicates that the level of the input signal is too high. The Input Attenuator Switches (see 4. above) are used to reduce the level to the point which causes the OVERLOAD indicator to extinguish.

Table 3-3. FM Record/Reproduce Module Front Panel Controls, Connectors, and Indicators (Cont)

Fig. 3-3 Ref. No.	Label or Description	Function
7.	CARRIER	Carrier Indicator. When lit (green), this LED indicates the presence of a reproduced signal. It remains lit as long as the recorder is reproducing.
8.	OUT	Output Cable Jack. Connect a cable between this jack and the device used for signal reproduction.

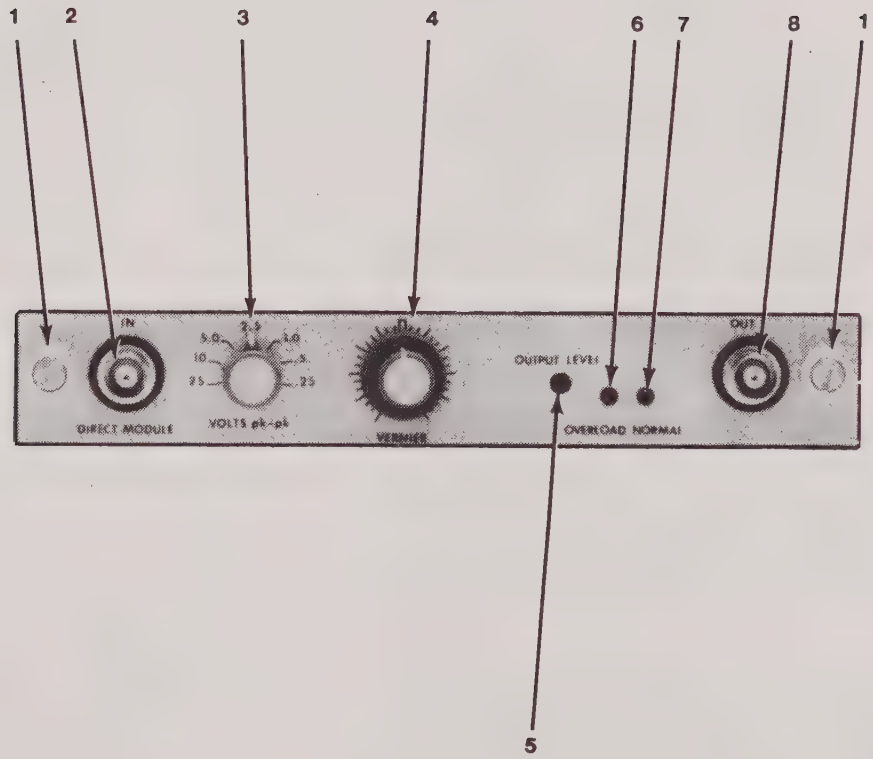

See Table 3-4 for Control Descriptions.

Figure 3-4. Direct Record/Reproduce Module

Table 3-4. Direct Record/Reproduce Module Front Panel Controls, Connectors, and Indicators

Fig. 3-4 Ref. No.	Label or Description	Function
1.	Module Screw Clamps	Screws are loosened or tightened when a module is removed from or reinstalled in the record housing. Keep screws finger-tight while the module is in use. **CAUTION** **Turn off power to the recorder before removing or reinstalling any record/reproduce module.**
2.	IN	Input Cable Jack. Connect a cable from the input signal source to this jack.
3.	VOLTS Peak-Peak	Input Attenuator Switch. This switch adjusts volts peak-peak.
4.	VERNIER	This control is used for fine adjustment.
5.	OUTPUT LEVEL	Reproduction Level Control Pot. This pot is used to adjust the recorder's reproduction level. Using a screwdriver, rotate the pot CCW to decrease and CW to increase the level.
6.	OVERLOAD	Recording Level Overload Indicator. When lit (red), this LED indicates that the recording level is too high. The LEVEL control (see 4 above) is used to reduce the recording level to the point which causes the OVERLOAD indicator to extinguish.
7.	NORMAL	Recording Level Signal Indicator. When lit (green), this LED indicates the presence of a normal signal.
8.	OUT	Output Cable Jack. Connect a cable between this jack and the device used for signal reproduction.

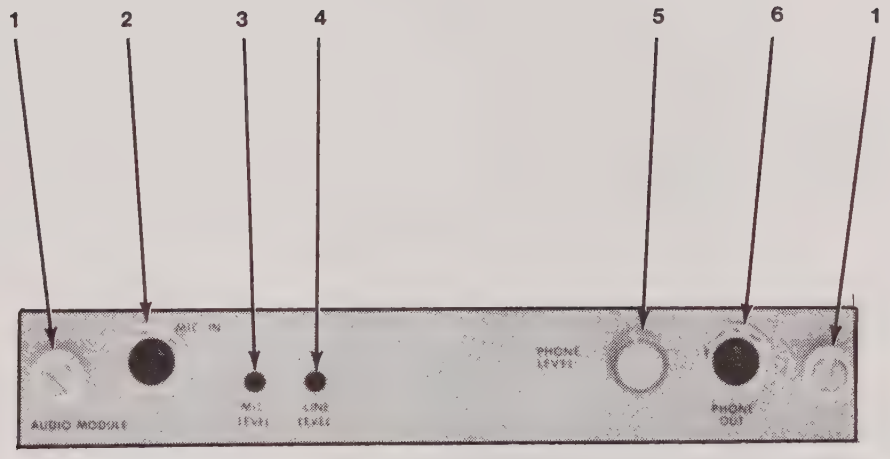

See Table 3-5 for Control Descriptions.

Figure 3-5. Audio Record/Reproduce Module

Table 3-5. Audio Record/Reproduce Module Front Panel Controls, Connectors, and Indicators

Fig. 3-5 Ref. No.	Label or Description	Function
1.	Module Screw Clamps	Screws are loosened or tightened when a module is removed from or reinstalled in the recorder housing. Keep screws finger-tight while the module is in use.
		CAUTION **Turn off power to the recorder before removing or reinstalling any record/reproduce module.**
2.	MIC IN	Microphone Cable Jack. Connect a cable from a low impedance microphone to this jack.
3.	MIC LEVEL	Microphone Level Adjustment Pot. Use a screwdriver to adjust this pot to obtain the best possible sound.
4.	LINE LEVEL	Line Level Adjustment Pot. This pot is used for adjusting high level inputs. It is used only if the recorder is equipped with an optional, rear-mounted BNC panel.
5.	PHONE LEVEL	Reproduction Level Adjustment Control. Adjust this control to obtain the output volume desired.
6.	PHONE OUT	Output Cable Jack. Connect a cable between this jack and a **high impedance** headphone or speaker.

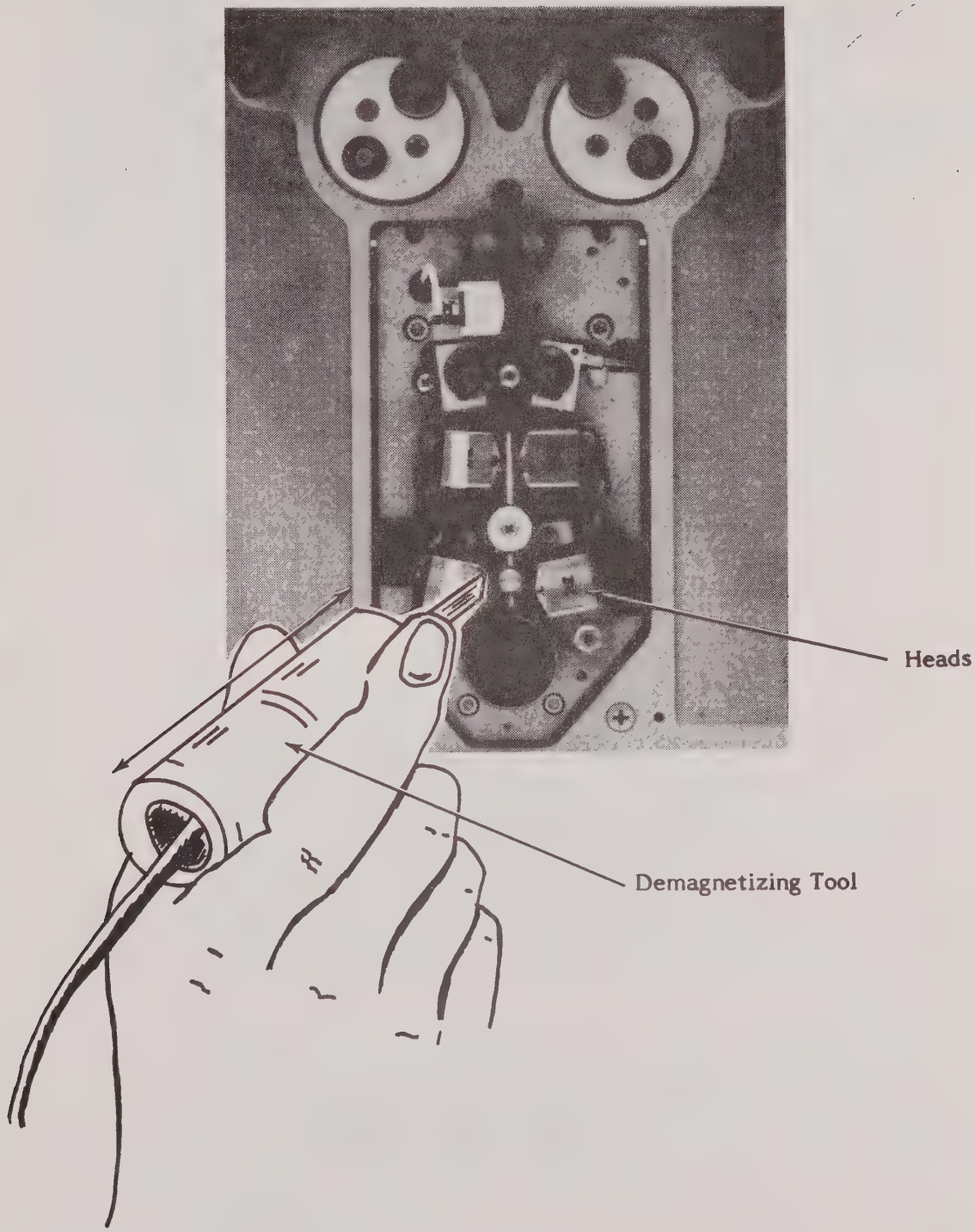

Figure 3-6. Demagnetizing Heads

e. Bring the tips of the degausser in contact with the head stack so that the tip is centered over the gap in the center of the head.

f. Move the tip up and down the head stack several times.

g. Slowly withdraw the degausser. Repeat steps e, f, and g on all head stacks.

h. Disconnect the degausser from its power source.

This same procedure can be used to demagnetize any component in the tape threading path that has inadvertently become magnetized by contact with any magnetic source.

3-6. Cleaning Tape Path

Normal wear causes magetic tapes to shed minute particles of oxide and base film. The particles gradually become deposited on all components which come into contact with the magnetic tape. High quality tape recorder performance demands that these particles be removed by periodic cleaning.

NOTE

For any removal of components required by this procedure, refer to Section VIII, Assembly/Disassembly.

CAUTION

It is recommended to use isopropyl alcohol and cotton swabs (Q-tip or similar), or clean dry cloth. Do not use any cleaning agent except those recommended above. Some agents wil damage these complex assemblies. Do not wrap the cleaning cloth around a metallic instrument that might scratch the head surfaces. Do not allow the head cleaner to drip or spray onto the finishes of the recorder or into any mechanical or electrical parts or assemblies.

NOTE

DO NOT use isopropyl alcohol on the turn-around idler. It will damage it.

*Freon is a registered trademark of the Dupont Corporation.

a. Turn recorder power OFF, remove tape and any protective covers from tape handling components. Refer to Tape Handling and Threading, Paragraphs 3-7 and 3-13.

b. Using a clean, dry cloth will usually suffice to remove tape residue. If wiping does not clean the tape handling surfaces properly, refer to Step c below.

c. Using a cotton swab that has been dampened but is not soaked with a recommended cleaning solvent, carefully clean all of the tape handling surfaces.

d. Use a lint-free swab moistened with isopropyl alcohol to remove deposits from all components in the tape path except for the turnaround idler roller.

e. Clean the turnaround idler (see Figure 4-1) with a lint-free swab moistened with Freon *TE.

f. Replace all protective covers previously removed; replace tape and thread for use. The following priorities should be observed when cleaning tape transports.

1. Use the proper solvent(s) recommended by the manufacturer. Do not allow solvent to drip or run onto the recorder.

2. Clean tape path completely at periodic intervals.

3. Keep hands clean when handling tapes and do not touch any tape path component with fingers.

4. Use uncontaminated cleaning solvents.

5. Use soft, clean cloth and cotton swabs.

6. Clean all transport areas where dust could settle.

7. Use firm finger pressure when scrubbing the heads, guides, and tape path components. Make the last cleaning pass across the heads in the direction of tape motion.

8. Discard all soiled cleaning materials.

3-7. Tape Handling

Do not handle tape reel by its flanges. Always hold the tape reel by its hub. This will prevent tape edge damage due to pressure from the reel flanges. There are instances when handling the tape itself is unavoidable, e.g. when threading the tape or the transport. Clean hands and the use of lint-free gloves will prevent skin oils or other contaminants from being transferred to the tape from the fingers. When winding the tape be sure to observe that the tape pack on the reel is tight and spooling with proper tension to prevent slip and windowing. Any spooling defect should be corrected promptly.

3-8. Tape Storage

Store tapes vertically on a tape-storage rack or in the containers in which the tapes and reels were shipped. Also, use protective plastic bands designed to fit over the reel flanges to prevent tape edge damage. Tapes must be stored in the proper environment. Refer to paragraph 3-9 for proper environmental conditions.

3-9. Tape Environmental Requirements

Magnetic tapes are vulnerable to magnetic flux, dust, dirt, fungus, temperature, and humidity. A clean environment with a relative humidity of about 45% and a temperature of about 70°F (21°C) is optimal. Tapes should not be used or stored near degaussing equipment or other tools and equipment that generates a magnetic field.

3-10. MOUNTING TAPE REELS AND THREADING MAGNETIC TAPE

3-11. Tape Loading and Threading

NOTE

Use only the tapes and reels as recommended in Section I to ensure optimum operation of the Gould 6500.

CAUTION

Before mounting an empty reel, check it carefully for:

- **Cleanliness**
- **Rough Edges**
- **Damage to the mounting hub**

DISCARD ANY DAMAGED REEL. If a reel is dirty, clean it before use.

3-12. Procedure for Recorder Model 6507 (8 in. Diameter Reels of 1/2 in. Tape)

a. Obtain a pre-checked empty reel and mount it on the right reel drive (takeup) hub as follows:

1. Loosen the hub's outer metal reel holddown (see Figure 3-7) by turning it counterclockwise as far as possible.

2. Position the reel so that one of the slots in its hub will engage in indexing pin in the recorder's hub.

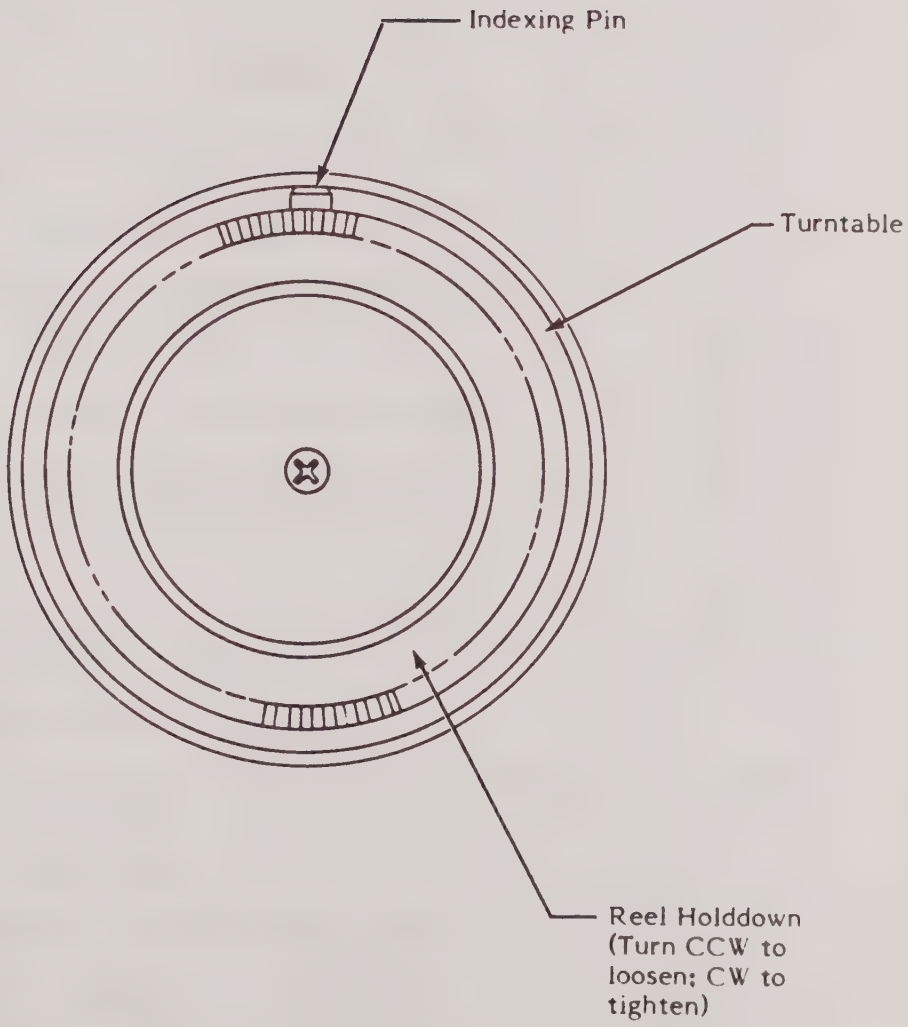

Figure 3-7. Reel Drive Hub - Model 6507
(For 8 in. Diameter Reels of 1/2 in. Tape)

3. Fit the reel on the hub and push it back as far as possible. Apply even pressure, to ensure that the reel is aligned on the turntable.

4. While holding the reel in place, tighten the holddown by turning it clockwise as far as possible.

b. Obtain the desired loaded reel and mount it on the recorder's left supply hub using the procedure described in steps a-1 through a-4 above.

3-13. Tape Threading Procedure

CAUTION

When threading tape, observe the following rules:

- **Do not permit the tape to contact any contaminated surface.**
- **Make certain that the operator's hands are as free as possible of any oil and dirt.**
- **Handle the tape as little as possible.**
- **While threading, do not touch the surface of any component in the tape path.**

a. Pull approximately three feet of tape from the supply reel and thread it through the tape path as shown in Figure 3-8:

1. Over the left upper tape guide
2. Under the lower roller and over the upper roller of the supply (left) tape tension sensor
3. Over the tape guide
4. Between the capstan and left pinch roller
5. Under and around the turnaround idler
6. Between the capstan and right pinch roller
7. Over the tape guide

8. Over the upper roller and under the lower roller of the takeup (right) tape tension sensor

9. Over the right upper tape guide

b. Place the loose end of the tape on the takeup reel hub and guide it partially around the hub.

c. Insert a finger through one of the openings in the face of the reel and hold the tape in place on the hub.

d. While holding the tape in place, rotate the reel clockwise until the tape overlays itself; then release the tape and rotate the reel six more turns.

e. Adjust both reels to remove any slack from the tape. After adjustment, the tape is ready for any operation employing forward movement (i.e. left to right).

3-14. Procedure for Recorder Models 6504 and 6508 (7 in. Diameter Reels of 1/4 in. Tape)

a. Obtain a pre-checked empty reel and mount it on the right reel drive (takeup) spindle as follows:

1. Position the reel so that it will slide over the three flanges of the spring-loaded reel retaining knob (see Figure 3-9).

2. Place the reel on the spindle and turn it until the key on the spindle engages the matching hole on the reel hub.

3. Gently press the reel onto the spindle. **Do Not Force.** If resistance is met, remove the reel and try again.

4. When the reel is fully seated on the spindle, pull the retaining knob out until its locking flanges are free; then turn the knob one-quarter turn (60°) to the right and release.

b. Obtain the desired loaded reel and mount it on the left supply spindle using the procedure described in steps a 1 through a 4 above.

c. Thread the tape as described in paragraph 3-13a through e and Figure 3-8.

3-15. DISMOUNTING TAPE

Perform the following steps to dismount a tape reel from the recorder:

a. Rewind tape onto the supply reel using the FAST control. The recorder will automatically stop when end-of-tape is detected.

b. Release the reel.

- For Models 6504 and 6508: pull the reel retainer knob out until it is free; then turn it until its three locking flanges match the slots in the reel hub. Release the knob.

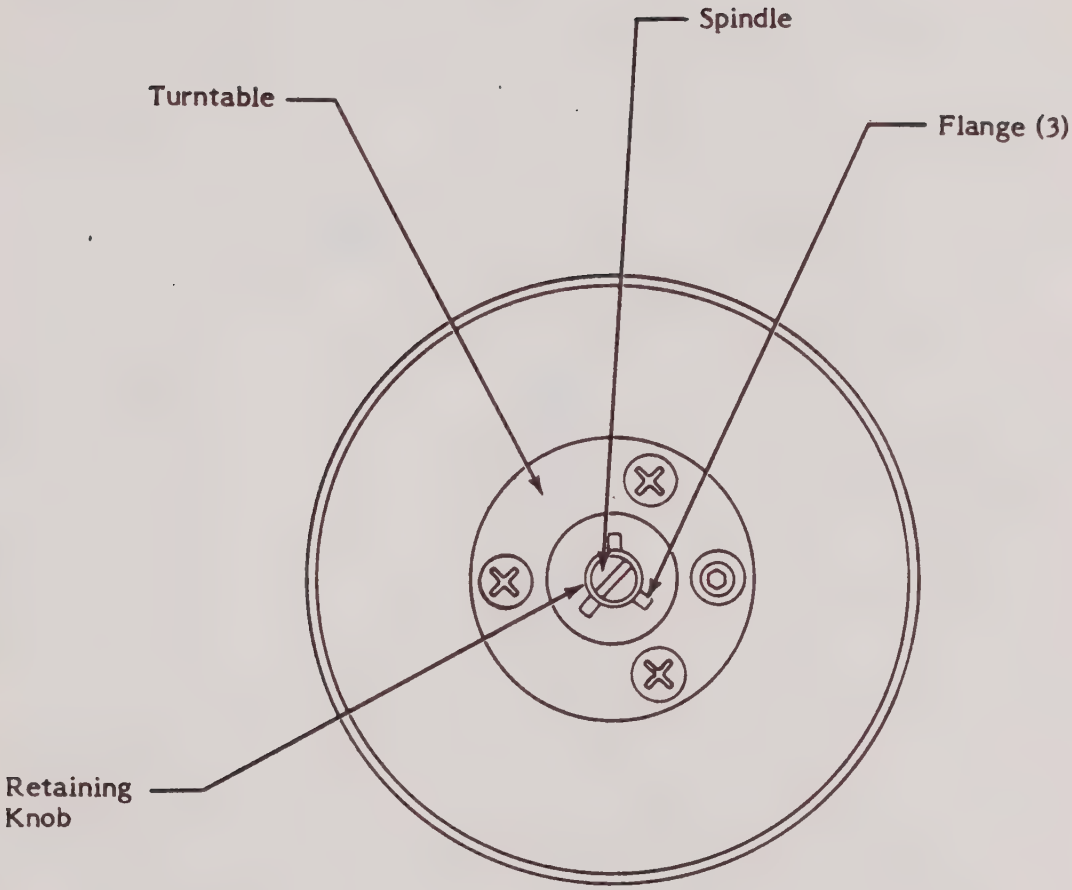

Figure 3-8. 1 Reel Drive Spindle - Models 6504 and 6508
1 (For 7 Inch Diameter Reels of 1/4 Inch Tape)

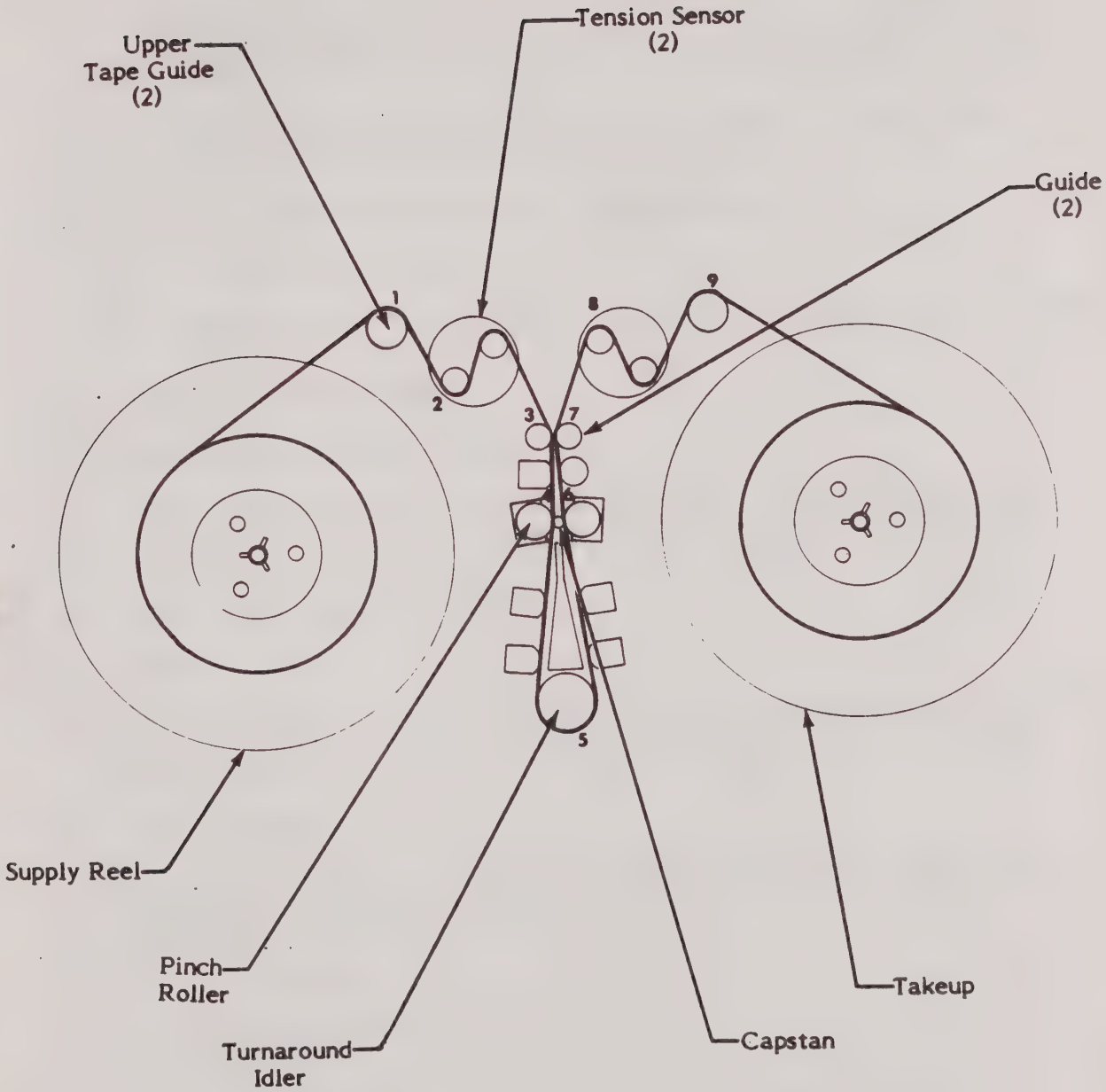

NOTES:

* Figure 3-8. does not show the recorder's head cover. This is done only for illustration clarity. It is not necessary to remove the head cover when threading tape.

Figure 3-9. Threading Magnetic Tape *

- For Model 6507: loosen the reel holddown by turning it counterclockwise as far as possible.

c. Pull the reel outward until it is free. **Do Not Force.** If resistance is met, check for binding surfaces and remove the cause before attempting to remove the reel.

d. Secure the loose end of the tape with "no-stick" adhesive tape (tape which will not leave a sticky residue when removed).

e. Mount circumferential reel protection band (if used).

f. Label, package, and store the tape reel.

g. Remove the takeup reel, if desired, by following steps b. and c. above. Package and store the reel.

3-16. OPERATION PROCEDURES

3-17. Standard Start-Up and Operating Sequence

Table 3-6 lists the sequence of operations performed for standard start-up, fast forward/rewind, record, reproduce, and erase procedures. Any visible equipment effect which results from each operator action is also listed.

3-18. OPERATION--GENERAL COMMENTS

3-19. Modes

A Record, Erase, or Reproduce mode can be initiated while the recorder is operating in a Fast mode (fast forward or rewind) and pressing either FAST switch will stop the operation of any current Record, Erase, or Reproduce mode.

3-20. Change of Mode

At any time during normal tape movement (Drive mode in use), a Record, Erase, operation can not be initiated unless you first STOP the recorder, then any of the following functions can be changed:

- Tape speed
- Tape direction
- Footage count
- Displayed information (speed or footage)
- Tape movement mode (i.e. DRIVE to FAST to DRIVE)

Table 3-6. Startup and Operating Procedures

Operator Action	Recorder Response
STARTUP	
1. Connect recorder to primary power source.	None
2. Press POWER ON switch.	a. POWER ON indicator lights (green). b. STOP indicator lights (red). c. LEDs display the initial drive speed (speed selected by and pre-programmed for the user installation). d. Power supply diagnostic indicators (recorder's rear panel) light. (10V REC indicators do not light.)
3. Mount reels and thread tape (see paragraphs 3-7 to 3-14).	None
4. Connect and adjust the record/reproduce module(s) to be used (see Tables 3-3, 3-4, and 3-5).	See applicable paragraphs in these tables for module indicator response during application.
HIGH SPEED TAPE MOVEMENT--FORWARD/REWIND	
1. Move tape forward by pressing ▷ FAST switch.	a. ▷ FAST indicator goes on. b. Tape moves from left to right at 180 ips.
2. Press STOP switch to stop tape movement.	a. STOP switch indicator lights. b. ▷ FAST switch indicator goes out. c. Tape movement stops.
3. Rewind type by pressing ◁ FAST switch.	a. ◁ FAST indicator goes on. b. Tape moves right-to-left at 180 ips.
4. Press STOP switch to stop tape movement.	a. STOP switch indicator lights. b. ◁ FAST indicator goes out. c. Tape movement stops.

Table 3-6. Startup and Operating Procedures (Cont)

Operator Action	Recorder Response
RECORD/REPRODUCE/ERASE	
Preparation	
1. Select speed.	
a) Depress switch DSP.	a. DSP switch indicator goes on. b. Current speed is displayed by LEDs.
b) Set desired tape speed using switch ↑ to increment or switch ↓ to decrement speed. One operation is performed each time control is pressed.	Value (speed) displayed by LEDs jumps to next higher value (incremented) or lower value (decremented) depending on control used.
	NOTE **If the footage count is being displayed when a new speed is selected, a display of the new speed will momentarily (1 sec.) interrupt the display of the footage count.**
2. Press P/RESET switch to reset footage count to zero.	None
3. Press and release DSP switch to display footage count.	The LED display goes blank.
Record	
1. Press TACH SYNC.	None
2. To record, press RECORD and ▷ DRIVE switches as follows:	a. RECORD switch indicator lights. b. ▷ DRIVE switch indicator lights. c. TACH SYNC indicator lights. d. 10V REC power supply voltage indicators (on rear panel) light. e. Tape moves forward at selected speed.
a) Press RECORD and hold in. b) Press ▷ DRIVE and release. c) Release RECORD.	

Table 3-6. Startup and Operating Procedures (Cont)

Operator Action	Recorder Response
RECORD/REPRODUCE/ERASE	
Record (Cont)	
3. Terminate operation by depressing STOP switch.	a. STOP switch indicator lights. b. RECORD, ▷ DRIVE switch and TACH SYNC indicators go out. c. REC voltage indicators (on rear panel) go out. d. Tape movement stops.
Reproduce	
1. If necessary, rewind or move tape forward until the desired footage count is reached.	
a) Place DSP switch in released (outmost) position.	Existing footage count appears on LED display.
b) Press the appropriate FAST switch.	a. FAST indicator lights. b. Tape is wound or rewound at 180 ips. c. Footage count display is rapidly incremented or decremented.
c) Press STOP when display shows desired footage count.	a. STOP indicator lights. b. FAST indicator goes out. c. Desired footage count is shown on display.
2. **If operating in Tape Servo Mode,** depress TAPE RDY, to synchronize reproduction with recorded reference signal.	TACH SYNC switch moves to its outer position.
3. Press ▷ DRIVE switch to start reproduction.	a. ▷ DRIVE switch indicator lights. b. TACH SYNC indicator lights; if pressed, TAPE RDY lights. c. STOP switch indicator goes off. d. Tape moves forward at selected speed.
4. Terminate replay by pressing STOP switch.	a. STOP switch indicator lights. b. ▷ DRIVE switch indicator goes off. c. TACH SYNC indicator goes off. d. Tape movement stops.

Table 3-6. Startup and Operating Procedures (Cont)

Operator Action	Recorder Response
RECORD/REPRODUCE/ERASE (CONT)	
Erase	
1. If necessary, rewind or move tape forward until the desired footage count is reached. (See 1. under "Reproduce" for procedure.)	
2. To erase data from the tape, use one of the following procedures: o If recorder is already operating in Record mode, simply press ERASE. o If recorder is not in Record mode: a) Simultaniously press RECORD and ERASE and hold them in. b) Press ▷ DRIVE and release. c) Release RECORD and ERASE.	a. RECORD, ERASE, ▷ DRIVE, and TACH SYNC switch indicators light. b. REC voltage indicators (on rear panel) light. c. STOP switch indicator goes off. d. Tape moves forward at selected speed.
3. Terminate operation by depressing STOP switch.	a. STOP indicator lights. b. RECORD, ERASE, ▷ DRIVE, and TACH SYNC indicators go off. c. REC voltage indicators go out. d. Tape movement stops.

During a change in tape direction and/or tape movement mode, the recorder automatically cycles through the Stop mode to the newly selected direction or mode. For example, if the recorder is executing a record operation in the forward direction and a fast rewind is required, the operator need only depress the ◁ FAST switch. The recorder will then enter Stop mode until tape movement is stopped and the record operation is cancelled; the rewind operation then starts automatically.

SECTION IV.

THEORY OF OPERATION

4-1. INTRODUCTION

The Gould 6500 overall operational description is illustrated in Figure 4-1, System Block Diagram. Detailed descriptions of the individual modules are described in the following paragraphs with the plug-in modules or options last.

All operational modes of the recorder are selected with illuminated pushbutton switches which interface with the switch logic PWB for controlling various recorder functions. Commands from the switches and the switch logic circuitry are routed to the control PWB which in turn activates the three recorder drive system motors via the servo/MDA circuitry.

Sensing circuitry at the pinch rollers, and left and right reel motors provide information as a feedback loop to the control circuitry which monitors each drive function as commanded from the pushbutton switches and the switch logic circuitry.

The reference oscillator PWB provides a 1 MHz clock reference signal used for proper sequencing in the operation of the recorder.

The head assemblies and the preamp, head switch, bias mixer, and bias oscillator PWBs make up the recording section of the Gould 6500 and in conjunction with the various operational plug-in modules accomplish the desired recording task.

A calibration module may be plugged in as an option to provide calibration of all plug-in module circuitry as well as testing and alignment of the basic recorder circuitry.

The display and footage counter PWBs provide the information such as tape usage (in both English and metric) and tape speed (also in English and Metric).

4-2. CONTROL MODULE

Control logic is a solid-state circuit system contained in a removable module. Through a series of transistor gates, it switches pinch rollers, mechanical brakes, capstan motor, and reel motors in the precise sequence required to insure rapid and safe transition from one operational mode to another. It also energizes record and erase circuitry when these functions are selected.

The control module provides the means of selecting the desired mode of operation and performing any needed tape handling operations. Design of the control circuits also provides protection of the tape which may result from any conflicting commands.

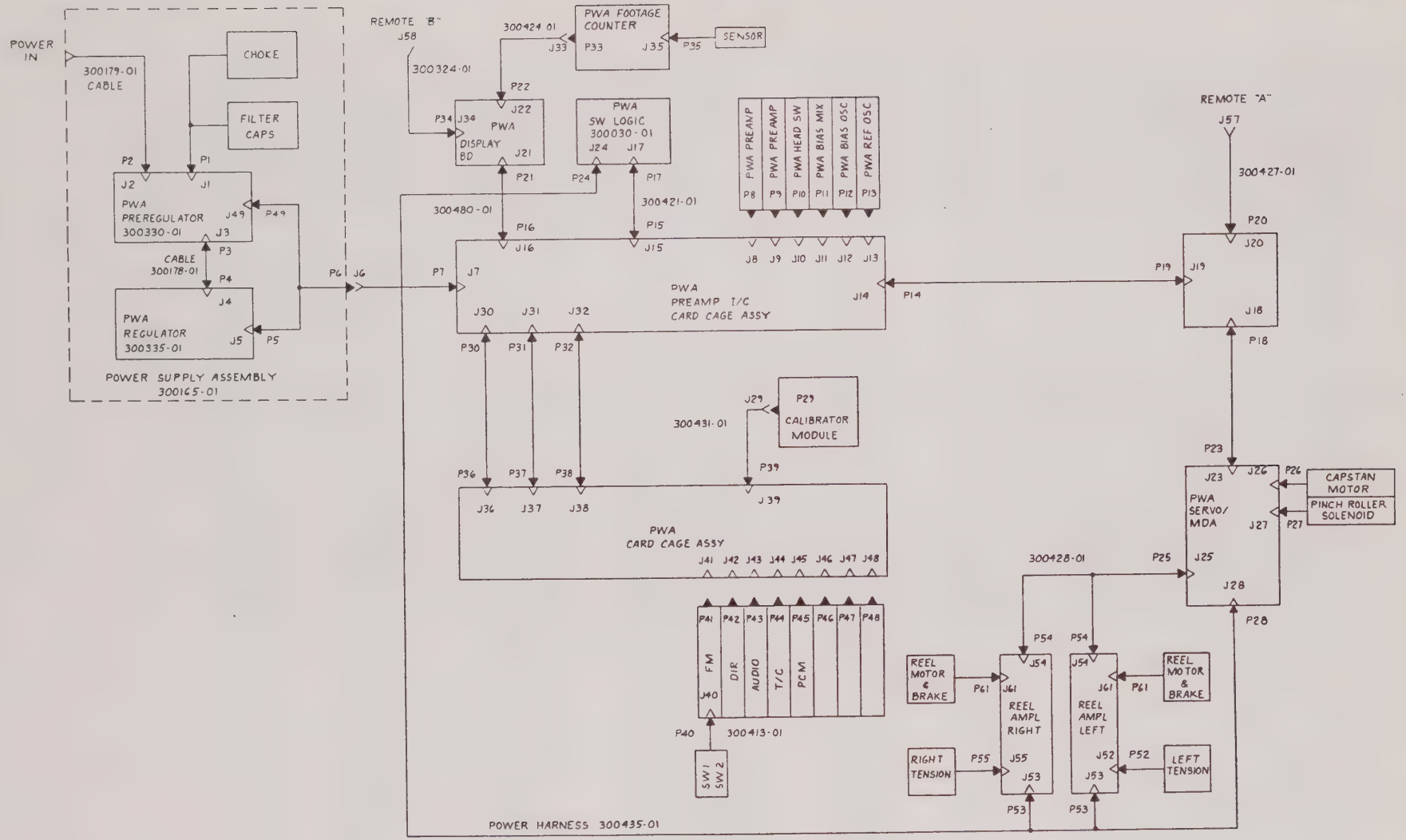

Figure 4-1. System Block Diagram

In controlling the functions of bi-directional tape motion, the logic system governs the rotational direction of reel motors and capstan motor. It automatically applies reel braking at the end of a tape or when the tape should break. Likewise, braking is applied when power failure occurs. During fastwind modes (forward or reverse), the control logic limits the speed of the rapidly moving tape reels. If a command is introduced while the tape is in motion, the signal is stored in the logic circuitry until both capstan and tape have come to a complete stop. The control module performs the functions shown in Table 4-1, Control PWB Commands. At any given time, the module is in one of five states. These are STOP, DRIVE FWD, DRIVE REV, FAST FWD, FAST REV. The module will only go into the four motion states from the STOP mode. If the tape is in motion when a new mode is selected, the module will first go to the STOP mode and then go to the mode selected (unless that mode is STOP, then the module will stop the tape and stay in the STOP mode until a further command is requested).

Figure 4-2 is the block diagram of the Control Module. As shown, the module receives momentary digital Lo input signals from the momentary switches or the Remote (control) lines.

Several of the momentary switches are wired so that they can only be operated in conjunction with certain other functions. The FAST FWD, FAST REV, STOP DRIVE FWD, and DRIVE REV switches are wired so that when two or more are pressed simultaneously, only one command signal can go Lo.

The Control Module functions may also be activated by signals from a remote fixture which simulates the momentary switches. These signals, also momentary digital Lo, must be capable of sinking a minimum of 1 mA. These additional remote switches, the record switch common and the record interlock, when activated hold their respective input lines low. The record interlock disables the record function and the record switch common allows one record function to be operated in any mode. (Normally RECORD will not function in the FAST FWD or FAST REV modes.)

Each command line except STOP is received by a latch in U3 or U10. The outputs of these latches represent and control the machine state. The U3 latch is used as a memory to retain the state of the operation selected. When the outputs of both FAST latches and DRIVE latches are Lo the machine is in the STOP mode which is the absence of a motion state.

The signal controlling the outputs of U3 is Command Enable, (CMD EN). This signal is generated by an Enable Circuit (U7 and U8). While the tape is in motion, two one shots (U11) disable the U3 outputs. This is accomplished when either the capstan tach signal or turnaround idler signal is changing. These square wave signals continuously retrigger U11.

If a motion command line is brought to Lo and CMD EN goes Lo after a 70 µsec delay, all (U3) latches are disabled causing the recorder to revert to the STOP mode and the tape decelerates to a stop.

Table 4-1. Control PWB Commands

Inputs	Outputs
ERASE	ERASE
RECORD	RECORD
FAST FWD	FAST FWD
FAST REV	FAST REV
DRIVE REV	DRIVE REV
DRIVE FWD	DRIVE FWD
STOP	STOP
	DIR MEM FWD
	DIR MEM REV
	REEL MOTOR ON

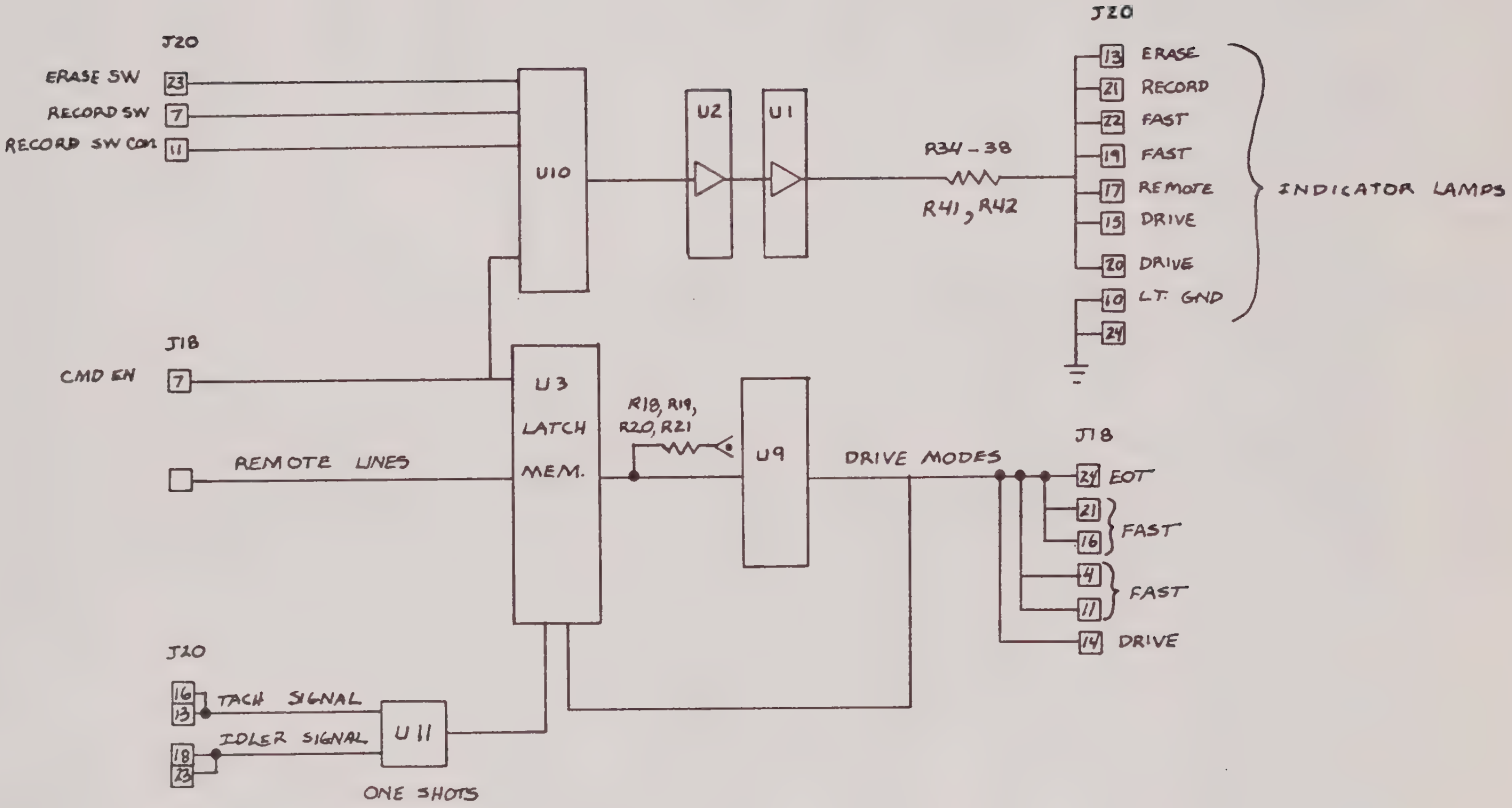

Figure 4-2. Control Module Block Diagram

Modification to the latch outputs and the operating mode of the recorder is also controlled by three signals, DRIVE, FAST, and REEL ON. DRIVE and FAST signals are derived from combinational logic (U6) and REEL ON is developed by U5, U4, and U15. U10 latches the RECORD and ERASE modes. If the latch is set and its output stage is enabled, the recorder will be in the RECORD mode. RECORD INTERLOCK floats unless STOP DRIVE (either direction) or EOT or power up exists. If one of the switches (STOP or DRIVE) is pressed but RECORD is not, the record latch will be reset.

To initiate RECORD mode, the RECORD switch must be held longer than the motion switch or the record latch will be reset.

The recorder will enter ERASE mode if the erase latch (U10) is set and the record latch is set with the recorder in RECORD mode. To reset the erase latch, the recorder is taken out of RECORD mode.

There are seven (7) incandescent indicator lights for the switches driven by U11 from the various latch outputs. The STOP lamp is driven by Q1 and is ON when all U3 outputs are Lo.

The 10 digital logic control module outputs are shown in Table 4-1. The module also has seven ground output lines which can be used to drive a set of remote indicator lights. A 47 ohm resistor is included in series with each of these lines for current limiting purposes. The output voltage used for the remote indicators is +12V.

Input and output requirements of the control module are shown in Table 4-2.

Table 4-2. Control PWB Input and Output Requirements

	Input	Output
Voltage	+10V ± 100 mV +12V ± 0.5V	
Current		+10V at 10 mA maximum +12V at 240 mA maximum

4-3. Switch Assembly

The Switch Assembly is used on the Control PWB Assembly for selecting the various drive functions on the Gould 6500. The Switch Assembly consists of seven, pushbutton, recessed, illuminated Manual Control switches. These switches are Erase Record Fast Reverse ◁|, Fast Forward |▷ , Stop Drive Reverse ◁ , and Drive Forward▷. Refer to Figure 3-1 and Table 3-1 for location and functional descriptions.

4-4. Switch Logic Assembly

The Switch Logic Assembly is a digital PWB with seven pushbutton, recessed, illuminated manual control switches. (Refer to Figure 3-1.) This assembly provides the interface for controlling several recorder functions. These switches are:

Switch	Function
BIN/DEC	Determines whether the assembly works in Binary Mode (1) or Decade (0)
Momentary Switches (See Table 3-1)	Connects the control lines to ground providing momentary input signals to the control electronics.
These are Dual State Switches providing steady state input conditions for the control of several different functions. For all switches the function is ON when the switches have been depressed.	The UP switch increases the speed one increment with each contact. The DOWN switch decreases the speed one increment with each contact. P/RESET - This switch resets the footage counter. Power On - Turns on the Power Supply. Display - In the ON position, the digital LED display on the the footage counter will show the tape speed. In the OFF position, the LED display will show the footage count. Tach Sync/Tape RDY - These two switches are interconnected so that either one or the other is ON. When positioned in Tach Sync (depressed), the servo will synchronize on the tachometer signal. In Tape RDY mode (depressed), the servo will synchronize on the tape signal if there is a signal on tape. Otherwise the Servo locks on TACH regardless of Switch position.

Figure 4-3 is the block diagram of the Switch Logic Assembly. The main function of this module is to control tape speed. The logic is provided by a 4-bit up-down binary counter (U4). This counter has a parallel load feature which is used to set the starting speed. The load pins are hardwired for a 000 output.

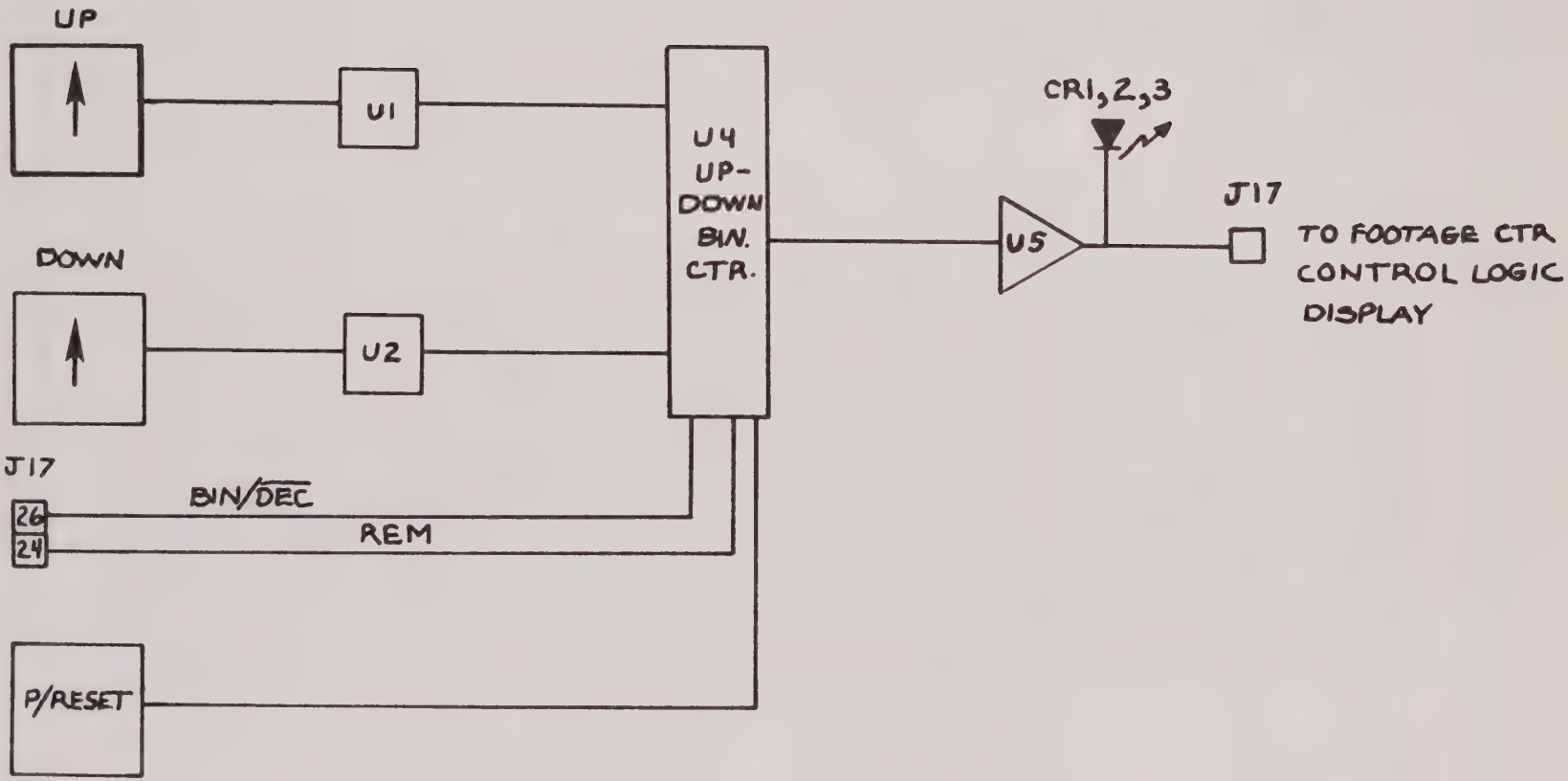

Figure 4-3. Switch Logic Assembly Block Diagram

When the power is applied to the recorder, the reset pin is pulled high resetting the counter outputs. The reset then falls low and the 000 input is loaded into the counter.

Because of this 000 initial state, the recorder will always start in high speed. The UP and DOWN momentary switches can then be activated to clock the counter to the desired speed.

4-5. Speed Logic

The speed information comes in a 4-bit code which consists of one Binary/Decade bit and 3 speed bits (See Table 4-3).

4-6. Footage Counter and Display PWB

The Display PWB and Footage Counter Module from a digital display system. The main functions of this system is to display tape footage and speed information. Figure 4-4 shows the block diagrams for the Footage Counter and Display. The main components of the system are 2 LSI 4 digit counter/display driver chips, U10 & U30. Each has 7 segment driver outputs and 4 digit driver outputs. The segment drivers drive the common cathode display DS1 directly. The digit drivers drive the display after being buffered. When speed is displayed, U30 strobes the display, and U10's outputs float. When footage is displayed, U10 strobes the display and U30's outputs float. The decimal point anode is driven by Q6 and is stored in random logic. The footage counter inside U10 continues working when speed is being displayed.

To protect the counter contents when the recorder is off U10, U6 and U7 are powered by the +5V standby bus. The +5V standby bus is supplied by the +5V power supply output when the recorder is ON and by battery BT1 when the recorder is OFF. When the power is ON, U6 and U7 allow the manipulation of U10's control pins or the footage counter control circuitry. When the recorder is OFF U6 and U7 disconnects the control circuitry from U10 and manipulates U10's control inputs to minimize battery current and protect the counter contents. The battery may be turned off for long term storage or when it is not necessary to protect the contents of U10 at switch S3 located on the display module. (See figure for switch location). The state of control signals DSP and DSP determine whether speed or tape footage is displayed on the display. When the DSP switch is in, or during power up, DSP is Hi, and speed is displayed. Also when the operator momentarily changes the speed, the DSP line is temporarily made hi by a short pulse from U21-11.

When the speed representation is displayed, the BCD value in complementary form of the strobed digit is present at U30's I/O port. U30's I/O port never acts as an output. The DSP signal on U30-11 controls the chip's display drivers. A hi on U30-12 causes the data on the BCD I/O port to preset the chip's counters, whose outputs are displayed. At some speeds U30-12 is held hi, the counters are held in preset condition, and leading zeroes are continously displayed. At other speeds, the line returns to the lo state, so that leading zeroes are blanked. The signal U15-11, originating in the random logic block blanks the first leading zero when displaying 0.95 cmps.

When the DSP is lo, footage is displayed. The footage counter control circuitry is enabled when footage display is selected and U10's counter can be reset and preset.

When the P/reset button is pushed, the counters are reset to zero, via a momentary lo on U10-14, causing a blank display. If the P/reset button is held in long enough, the footage control circuitry initiates the preset operation. U10's counters will be preset to the complement of the data at its I/O port. U5's 3-state output will be enabled and the data from the thumbwheel switch will be transferred to the I/O port. (If the RCU is not connected, the counters are loaded with zeroes.)

U11's output is active only during the Load operation, which can be initiated only from the RCU. The strobed data of each counter in BCD form appears at U12's output. During the Load operation this data is loaded thru the I/O port and into a 4 digit register separate from the counter. The function of this register is to control the EQUAL output signal. The EQUAL signal along with the ZERO signal are fed to the RCU for controlling tape travel in Serpentine Record and Shuttle playback modes. When the footage is being displayed, and the operator isn't initiating one of the above operations, U10's counter contents are being output on the I/O port in true BCD form for the RCU. U10's control line logic levels for all types of modes above are in the table on schematic .

A pair of LED - photo transistors are used to measure tape footage at the tach disk attached to the turnaround idler. The output of the photo interrupter alternates between two levels as the disk rotates.

The output of the interrupter is converted to logic levels by comparator U1 on the footage counter module. When the interrupter is focused thru the inside pattern, a 1 foot tape movement causes 100 pulses to pass at U1's output. When the interrupter is focused thru the outside pattern, a .1 meter tape movement causes 100 pulses at U1's output. The 100 counter U2, U3 and U5 following the comparator outputs a 50 uSec pulse to U10 for every 100 pulses at U1's output, so the least significant displayed digit is incremented or decremented every foot or .1 meter. The MEM DIR signal from the Control Module determines whether the coutners (U2, U3, U5) are counting up or down. The -100 counter is reset to 0 when the recorder is shut off.

The one shot connected to U1's output produces a digital signal with a duty cycle proportional to tape speed. Potentiometer R1 is used to set the pulse width to .33 mSec for the inside tack disk pattern and .11 mSec for the outside tack disk pattern. The signal limits the maximum fast speed to 180 ips and is also used to sense tape motion.

4-7. Reel Motor Assembly

Each of the two Reel Motor Assemblies consist of a DC motor, brake assembly and a Reel Amplifier PWB. The Reel Amplifier PWB, Figure 4-4 controls the motor current and one brake solenoid. Figure 4-6 is the Reel Motor Assembly block diagram.

NOTE

The left and right reel amplifier PWB's are identical. However, the Supply (left) reel amplifier PWB is designated as a -01 and the jumper (see parts location diagram Figure 6-10) is connected from E2 to E3. The takeup (right) reel is designated as -02 and the jumper is connected from E1 to E2.

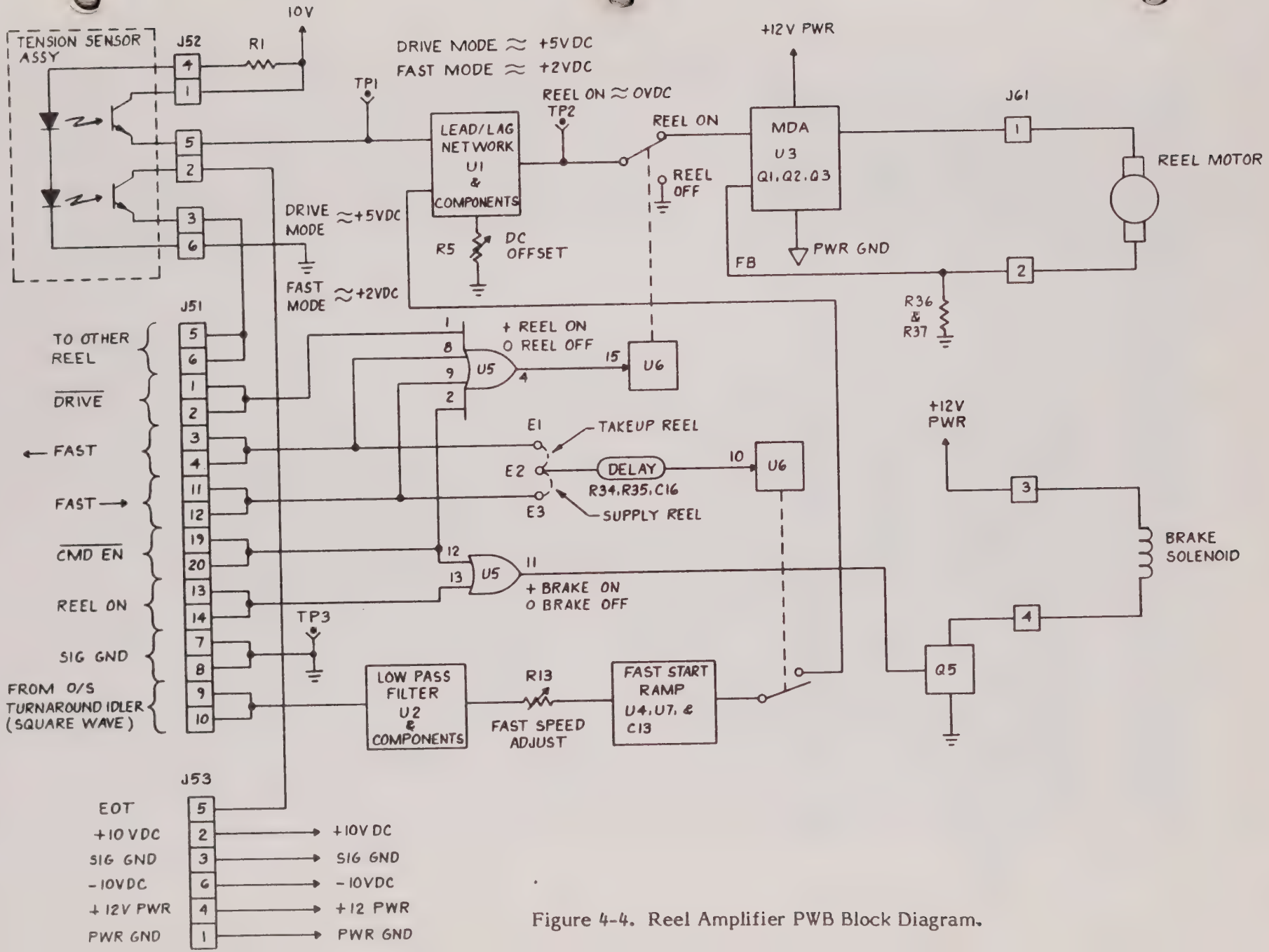

Figure 4-4. Reel Amplifier PWB Block Diagram.

The Reel Amplifier PWB consists of a lead/lag network (U1 and components), a Motor drive assembly (U3, Q1, Q2 and Q3 and the reel motor), a low pass filter (U2 and components), a fast start ramp (U4, U7 and C13), and control circuits for all drive functions and brake solenoid actuation.

When the Reel Amplifier PWB receives a drive command, the control circuitry at U5 causes the brake solenoid to release by shutting OFF Q5 and U6 switches to reel on. the lead/lag network at U1 receives signals from the tension sensor assembly and the turnaround idler which generates a square wave. The Fast speed adjust R13 controls the trailing reel drag in the Fast mode and the DC offset adjustment R5 controls the inputs from the tension sensor and the turnaround idler to provide the proper tape tension in all modes.

Q1, Q2 and Q3 provide the power to the reel motor. The reel motor acts as part of a feedback control system with U3 when in the Drive mode.

A delay network consisting of R34, R35, and C16 controlling U6 provides a 2 sec. delay between Fast Forward and Fast Reverse. This delay allows the tape to stop before beginning travel in the opposite direction maintaining a proper tape tension preventing breakage.

Table 4-3. Speed Logic

LOGIC BITS		MACHINE OPERATION	
Binary/Decade	CBA	Speed	Mode
1	000	30 ips	Binary
1	001	15 ips	Binary
1	010	7-1/2 ips	Binary
1	011	3-3/4 ips	Binary
1	100	1-7/8 ips	Binary
1	101	1-5/16 ips	Binary
1	110	15/32 ips	Binary
0	000	37.5 ips	Decade
0	001	3.75 ips	Decade
0	010	0.375 ips	Decade

The ABC output code comes in +10V output and a +5V output.

Table 4-4. Speed Display

IRIG SPEED (IPS)	DISPLAY	
	IPS	CMPS
37.5	37.5	95
30	30	76.2
15	15	38.1
7-1/2	7.5	19.1
3-3/4,3.75	3.75	9.5
1-7/8	1.875	4.8
15/16	0.938	2.4
15/32	0.469	1.2
0.375	0.375	0.95

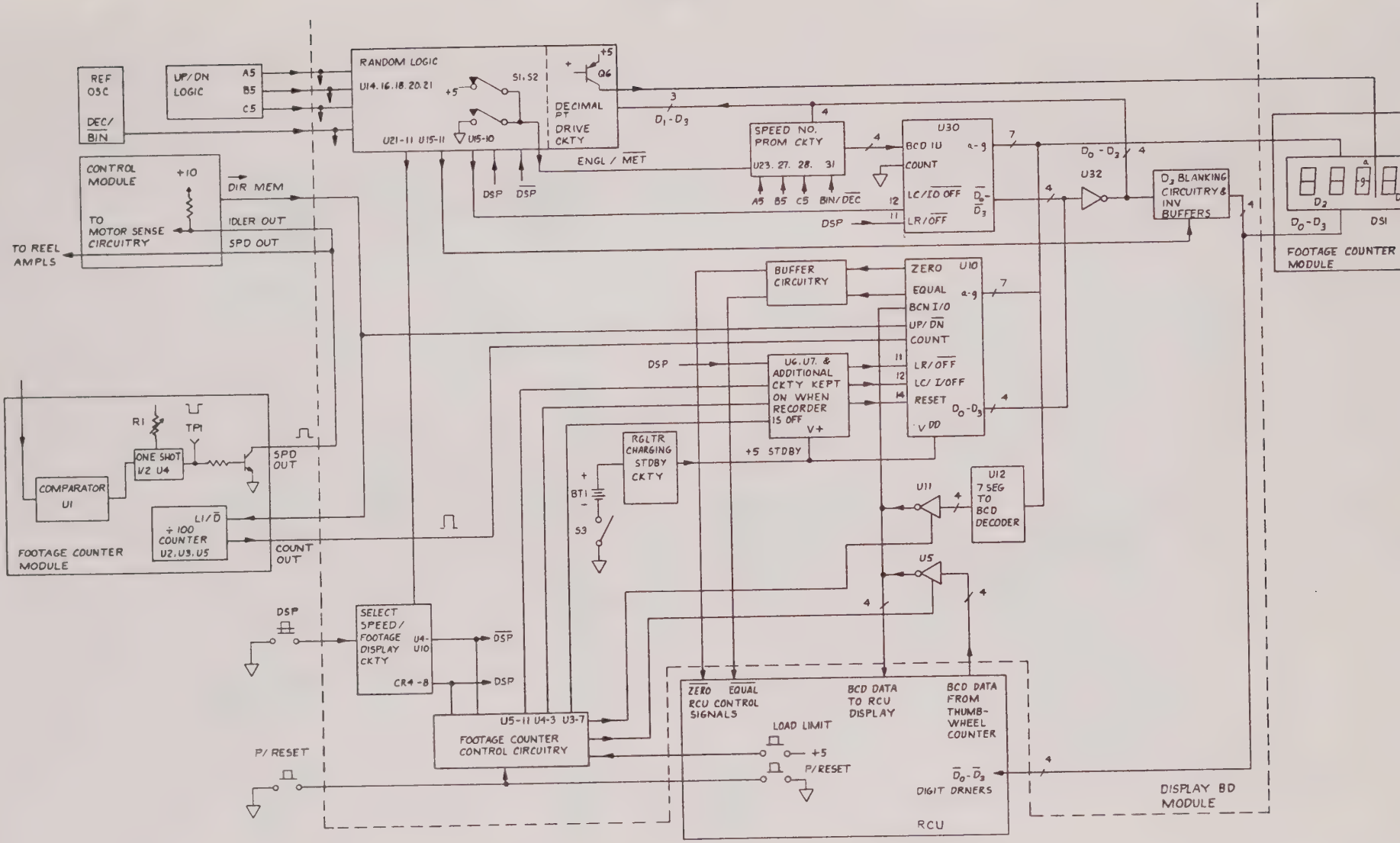

Figure 4-5. Footage Counter and Display Block Diagr

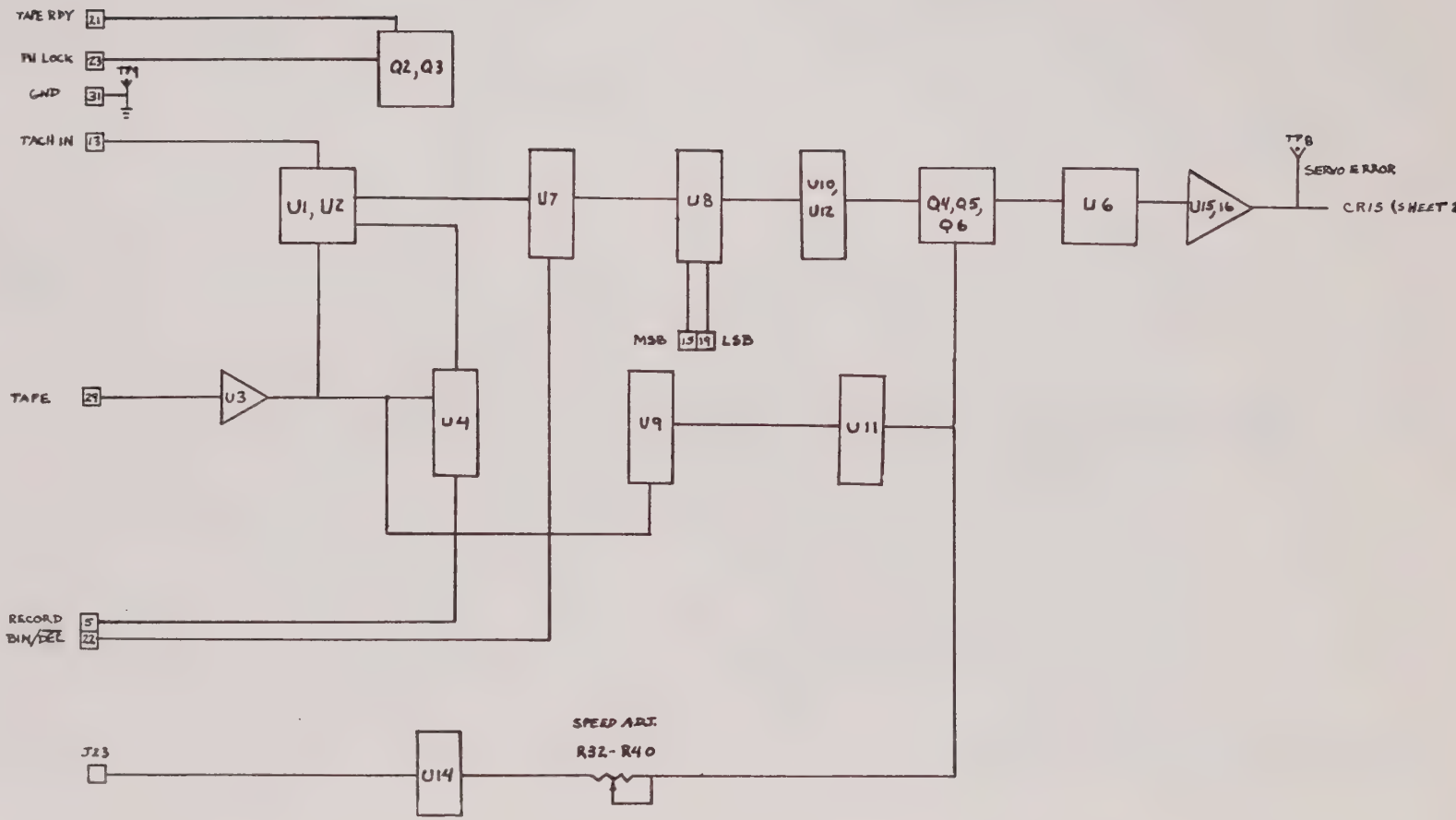

Figure 4-6. Reel Motor Assembly Block Diagram (Sheet 1

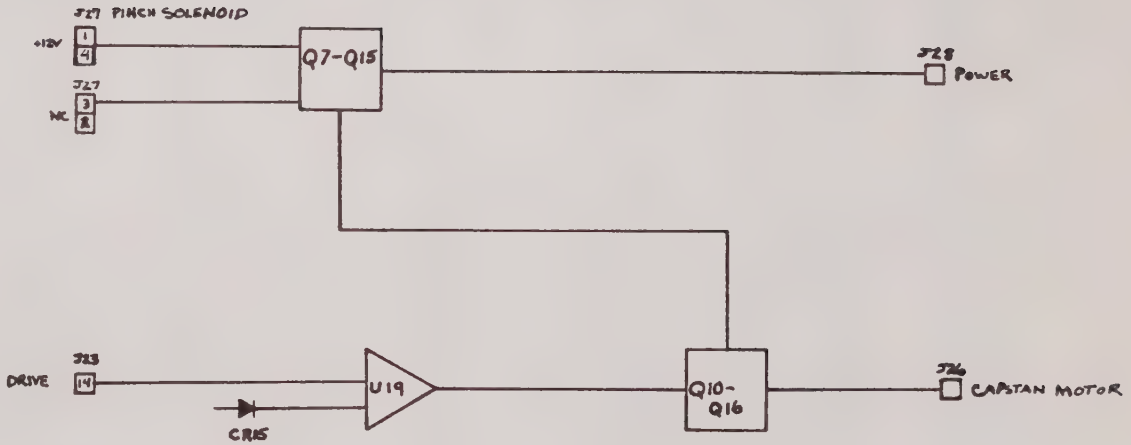

Figure 4-6. Reel Motor Assembly Block Diagram (Sheet 2)

4-8. Reference Oscillator Assembly

The Reference Oscillator Assembly provides the necessary reference signals that are required for the Operation of the 6500 recorder. Figure 4-7 is the Reference Oscillator Assembly block diagram.

This assembly operates the reference signals from a 1 mHz crystal oscillator (Y1). Buffer U1 isolates Y1 and drives the counters and logic circuitry. U3, U5 and U6 are binary/decade selectable counters (see table 4-5) which divide the 1 mHz signal which then is multiplexed by U7 and U8. Outputs from U7 and U8 are the speed lines, Servo reference and record reference signals.

The U2, U4 circuit provides the output for the record reference signal is controlled by the phase lock status return from the capstan servo assembly. Table 4-5 provides the signal speed coding and Binary and Decade states of the speed lines for each speed. Table 4-6 shows the frequencies and their relationship to operation.

4-9. Reference Signals

All frequencies have a ± .1% tolerance and are square waves from +10V to GND.

a. Record Bias Frequency

   1 mHz

b. Record Reference

   This signal provides a reference frequency for recording on tape. See Table 4-6.

c. Servo Reference

   This signal is used for the servo control of the tape speed. See Table 4-6.

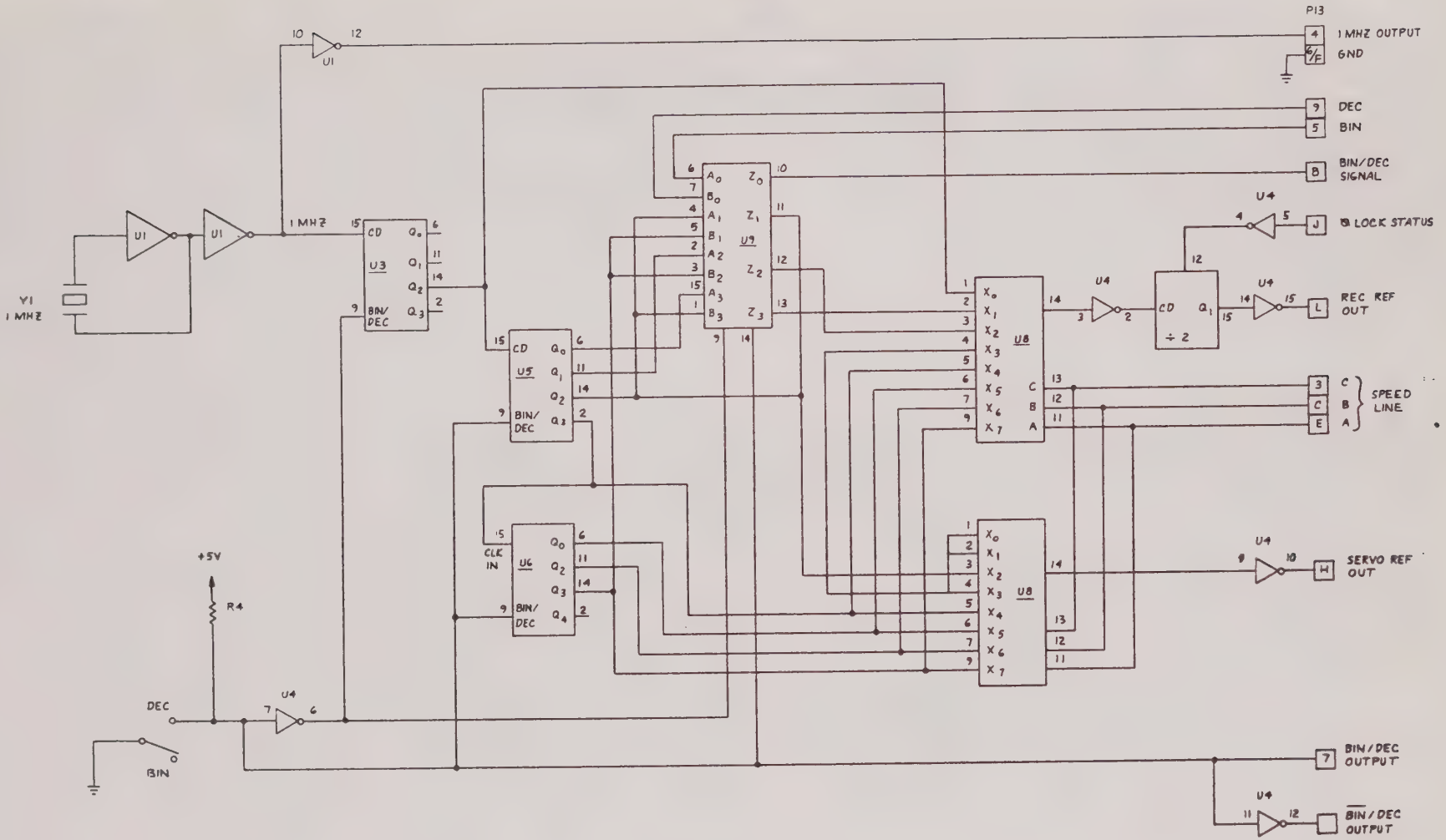

Figure 4-7. Reference Oscillator Assembly Block Diagram

Table 4-5. Mode Logic

	Binary						Decade		
SPEED	30	15	7-1/2	3-3/4	1-7/8	15/16	15/32	37.5	3.75	.375
A	0	1	0	1	0	1	0	0	1	0
Speed B	0	0	1	1	0	0	1	0	0	1
Lines C	0	0	0	0	1	1	1	0	0	0
BIN/DEC	1	1	1	1	1	1	1	0	0	0

Table 4-6. Frequency Relationship to Operation

Binary Speed (ips)	REFERENCE FREQUENCY PIN L Record Ref.	PIN U Servo Ref.
30	50 kHz	12.5 kHz
15	25 kHz	"
7-1/2	12.5 kHz	"
3-3/4	6.25 kHz	"
1-7/8	3.125 kHz	6.25 kHz
15/16	1.56 kHz	3.125 kHz
15/32	0.78 kHz	1.56 kHz
Decade Speed (ips)		
37.5	62.5 kHz	12.5 kHz
3.75	6.25 kHz	12.5 kHz
0.375	0.625 kHz	1.25 kHz

4-10. Bias Mixer PWB

Figure 4-8 is for the Bias Mixer PWB block diagram. The Bias Mixer combines the bias signal and the record signal for the Gould 6500. The bias current is set for each channel by R1-R8 and the current is fed through a bias trap which then passes it on to be mixed with the bias current to drive the record head.

The output of the bias mixer PWB is a bias signal with the ac record signal added to it.

4-11. Preamplifier PWB

Figure 4-9 is the Preamplifier PWB block diagram. The Preamplifier PWB is a differential amplifier capable of providing +60dB of amplification of the head signal in the Gould 6500.

Each channel of the PWB has a separate amplifier consisting of two ICs which are dual op amps. The inputs and outputs of this amplifier are differential. The first stage (U1, U3, U5, or U7) has an amplification ratio of 100 to 1 and the second stage (U2, U4, U6, or U8) amplification ratio is 10 to 1. This provides an output voltage of 1 Vrms with a gain of +60dB ± 2dB at 1 kHz. The frequency response is 50 Hz to 250 kHz at ± 3dB with a total harmonic distortion of less than 1% at 1 kHz.

4-12. Bias Driver

Figure 4-10 is the Bias Driver PWB block diagram. The Bias Driver PWB provides the bias drive current for the Gould 6500 record head. This circuitry only operates in the Record mode. Q5 supplies the current for the circuitry and normally it is off. When a record turn-on signal is received from the control module, Q11 turns on Q5. Q2 in the primary of T1 begins to oscillate providing a "sync" signal which synchronizes the oscillations with a 1 mHz signal. T2 tuned for the maximum bias output, is amplified and driven by Q3 and Q4, filtered by L2, C5 and C6 which block second order harmonics. Q1 loads the "sync" signal which provides control on the output amplitude.

When the Erase mode is selected, Q10 and Q9 turn off Q6 allowing Q7 and Q8 to be driven by T2. These switches alternately drive the erase head. R17 balances the base drive for Q7 and Q8. The erase head is series resonated by C11 and C12 is the erase head tuning adjustment.

4-13. Capstan Motor Tachometer

Figure 4-11 is the Capstan Motor Tachometer Assembly block diagram. The Capstan Motor Tachometer Assembly consists of a precision ball bearing spindle, a DC motor, an optical disc, and a preamplifier.

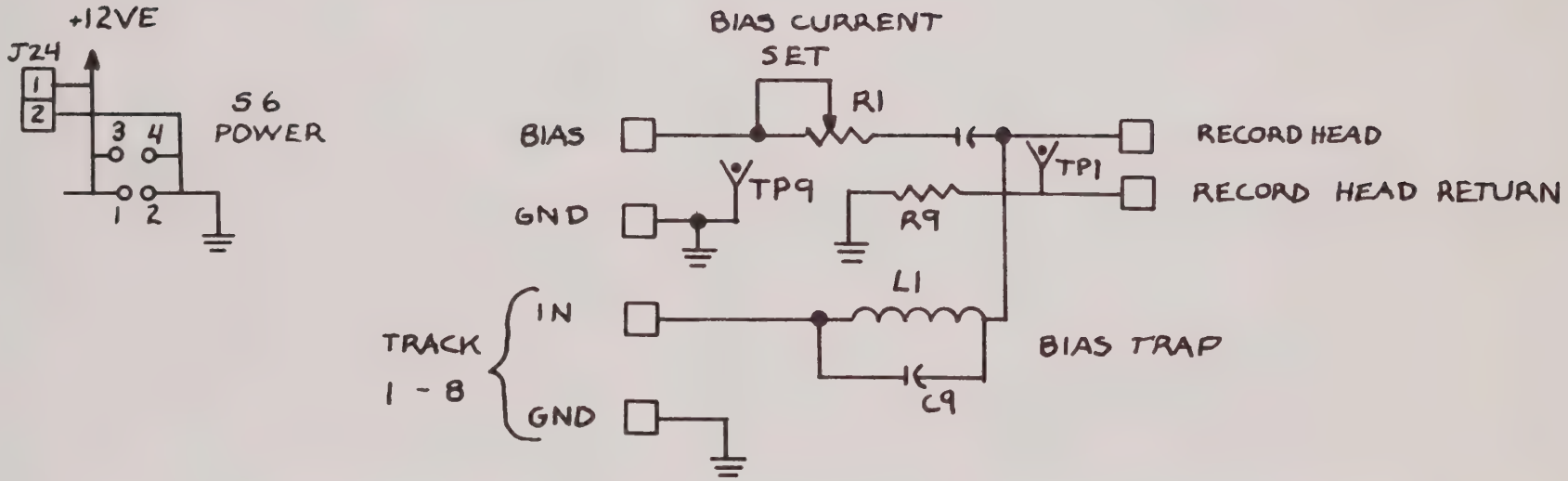

Figure 4-8. Bias Mixer PWB Block Diagram

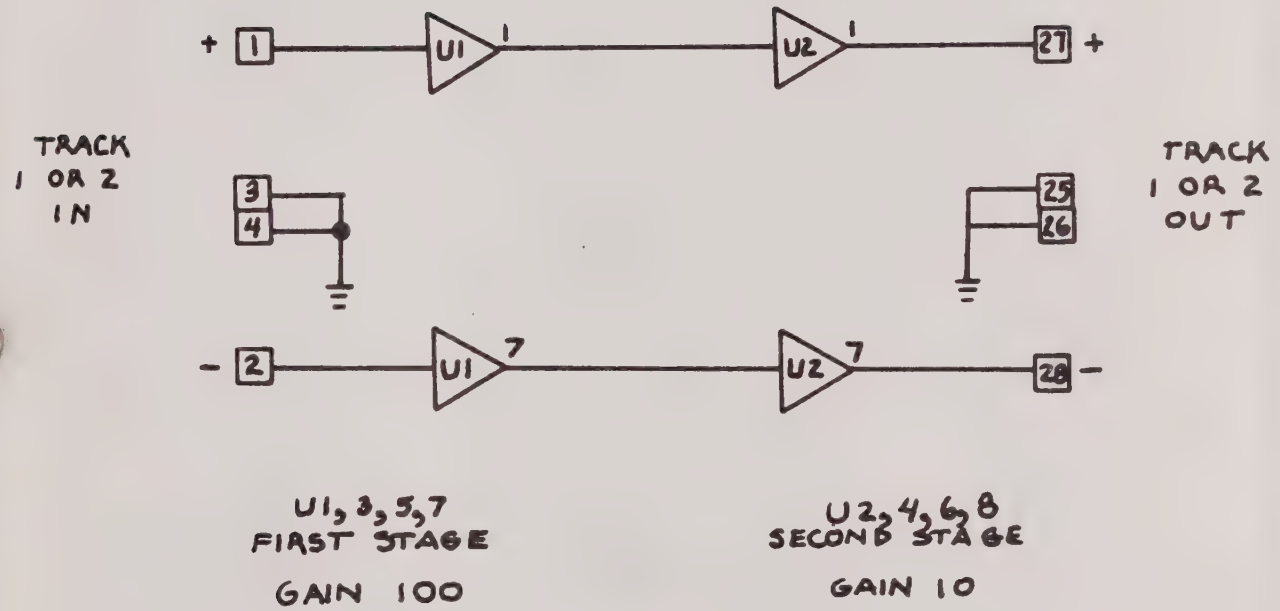

Figure 4-9. Preamplifier PWB Block Diagram

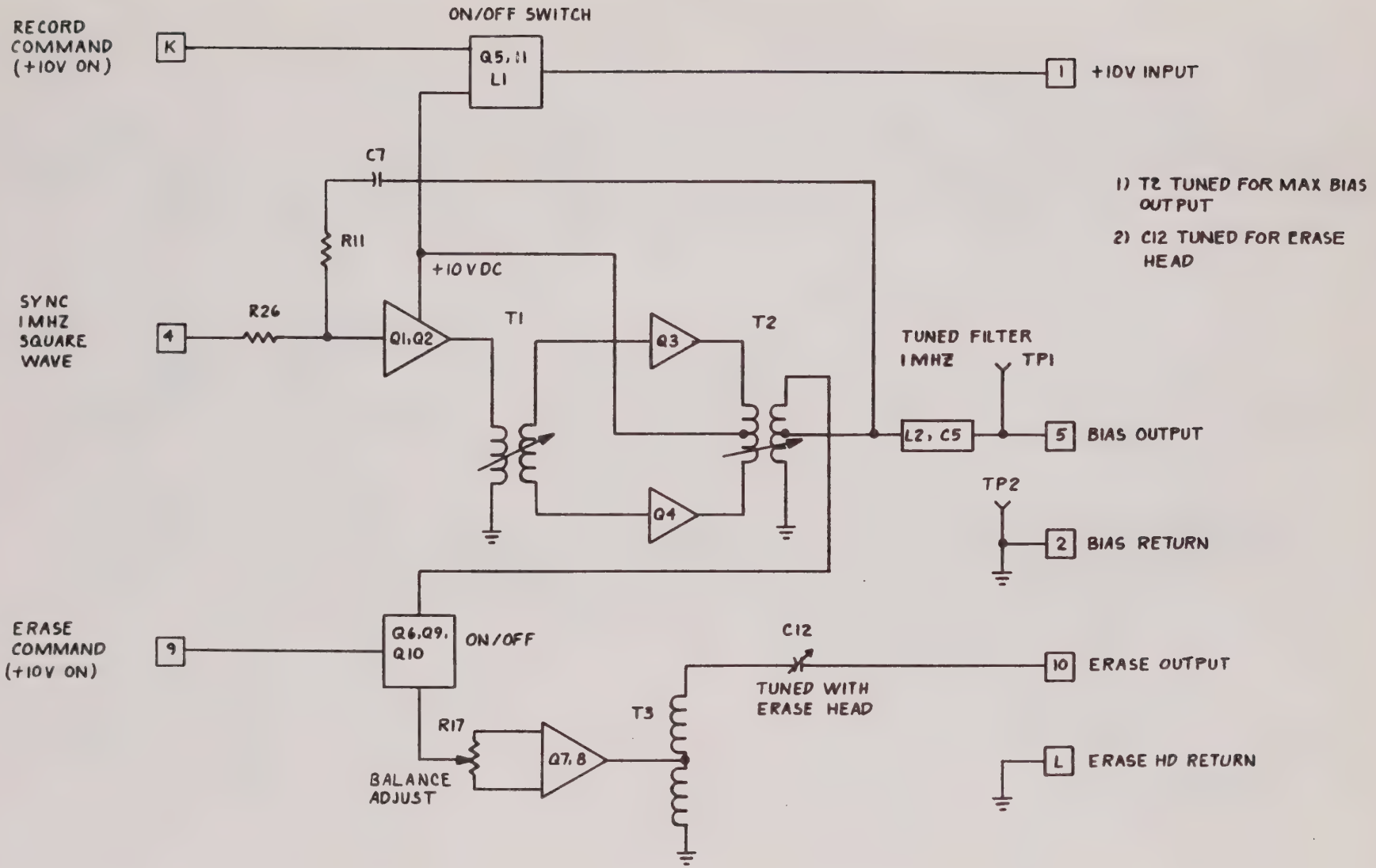

Figure 4-10. Bias Driver PWB Block Diagram

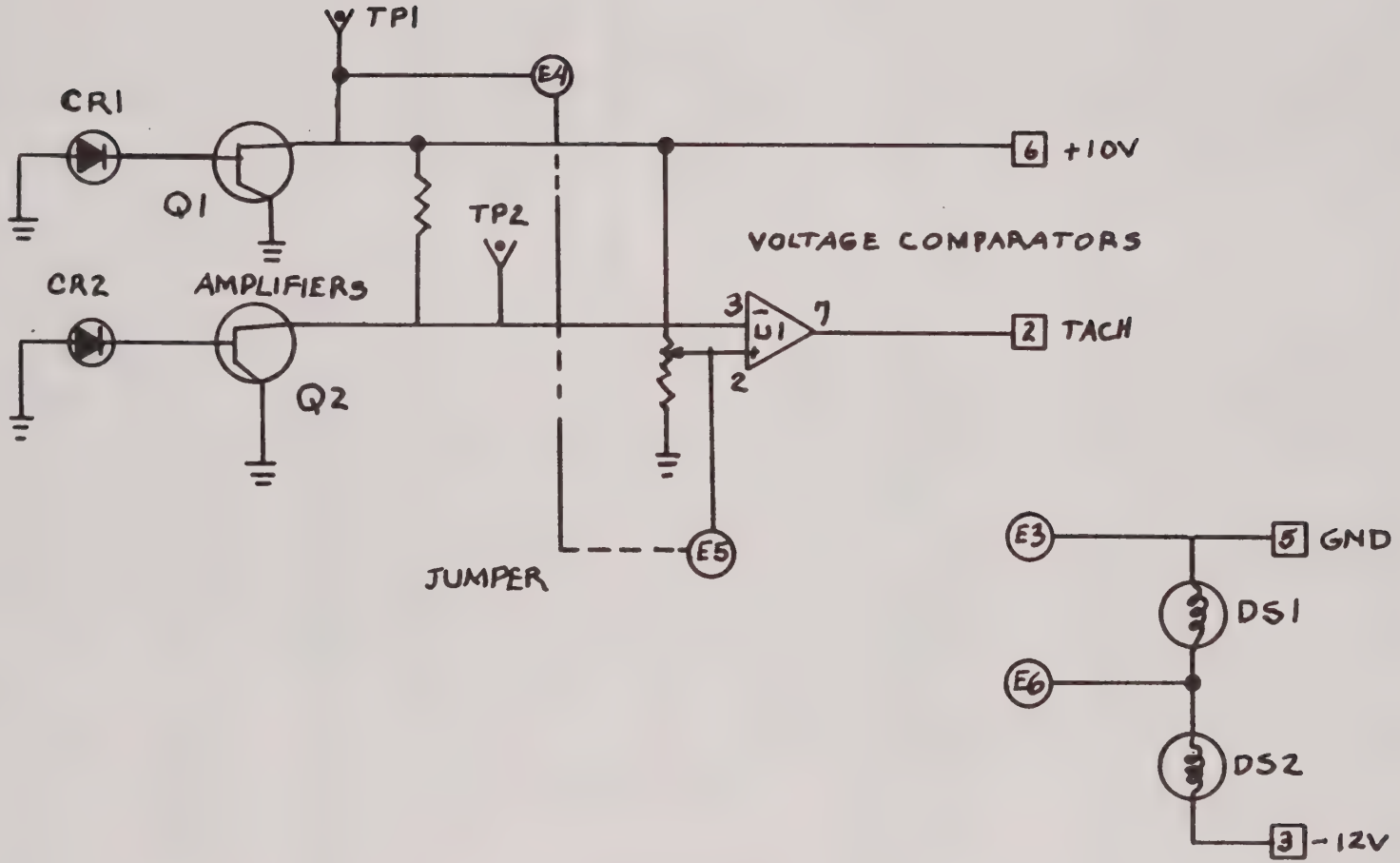

Figure 4-11. Capstan Motor Tachometer Assembly Block Diagram

The torque motor (DC motor) is directly connected to the capstan shaft (ball bearing spindle) and operates on current from the capstan servo. The tachometer portion of the assembly consists of an optical disk. This disk has 2,628 windows and is mounted on a precise turntable. Two optical grids spaced 180 mechanical and electrical degrees apart and two incandescent lamps and photo sensitive diodes complete the tachometer. As the disk rotates, the window allows illumination of the photo sensitive diodes which are mounted on the preamp PWB. Two identical amplifiers, Q1 and Q2, amplify the signals from the photo sensitive diodes. The phase of these signals is adjusted mechanically to be 180 degrees apart. These two signals are applied to voltage comparator U1. The output signals are 0-10V squarewaves of 2,628 cycles per resolution. These signals are sent to the control module and the LED display which reads out the coded speed value when the display is in the Tach mode.

4-14. Capstan Servo Assembly

The Capstan Servo/Motor Drive Assembly consists of a PWB mounted on a heatsink. The PWB contains the circuitry for controlling the Capstan Motor Speed. The power handling circuitry is mounted directly on the heatsink which provides heat dissipation, Figure 4-12 is the detailed block diagram for the Capstan Servo Assembly.

This assembly has four major operating circuits. These are:

Speed Select Logic
Phase Comparator
Compensation Amplifier
Power Amplifier

Addition circuitry provides:

Tape/tach Select Logic
Starting Ramp
Pinch Roller Driver

The speed select logic receives signals from the Capstan Motor Tach Disc Switch Logic, the reference oscillator and control logic assemblies.

The TACH, TAPE and RECORD signals are received by the Tach/Tape select logic circuitry U1 and U2 and the tape signal amplifier comparator U3, U2, U17 and symmetry adjustment is controlled by R11. Tape level is sensed by U3, and U4 and controlled by tape level adjustment R8.

Speed commands are received from the control Logic PWB and are counted down by U7 and selected by U8 and U9 which provides a TACH or TAPE Signal to phase comparator U10, U11 and U12. The signals from the speed lines are also received by speed select switch U14 and BIN/DEC logic U18.

The TACH or TAPE Signal is received by Phase Comparator U10, U11 and U12 along with the Reference Signal from the reference oscillator (see paragraph 4-9). U12 generates an output that is a rectangular wave with a duty cycle that is proportional to the phase difference of the compared signals. The signal from U12 is passed to zero order sample and hold circuitry U6, Q5 and Q6 which also receives a signal from the speed select switch.

The ramp voltage represents the average value of the phase comparator voltage and is used to drive the ramp start circuit Q1, U5, U6 after first passing through phase corrector amplifier U16 and its associated circuitry. The phase correction amplifier provides stability for the phase locked loop of the drive control system feedlock signal from U19. Lead and Log circuitry consisting of R45, C19 and R46, R46 and C18 components are ensured proper tape tension.

Power Amplifier Q9, Q11, Q15 and Q13 are controlled by U19 which has the dual purpose as an analog amplifier and a direction switching amplifier. The power amplifier is a budget configuration allowing for the reversal of the motor current.

Pinch roller solenoid activation is provided by the pinch roller drive Q7 and Q8.

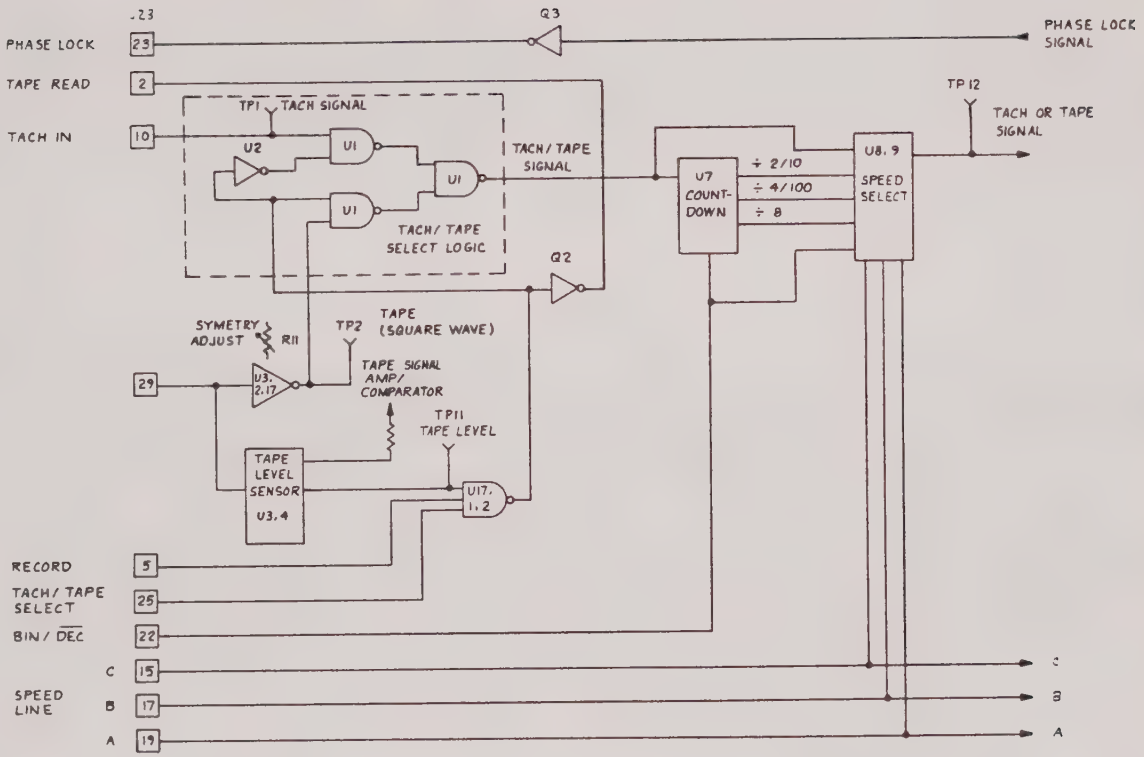

Figure 4-12. Capstan Servo Assembly Block Diagram, Sheet 1

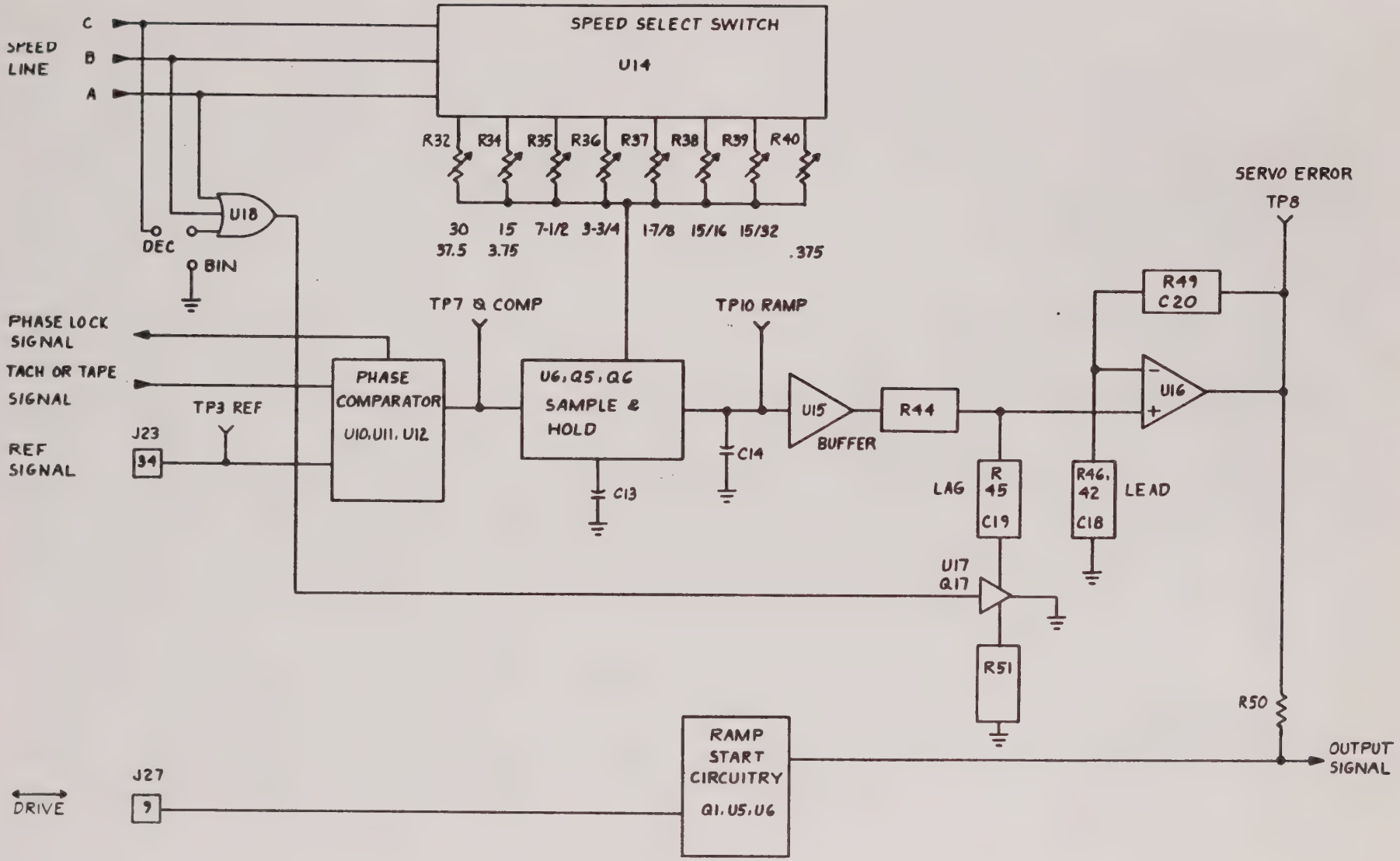

Figure 4-12. Capstan Servo Assembly Block Diagram, Sheet 2

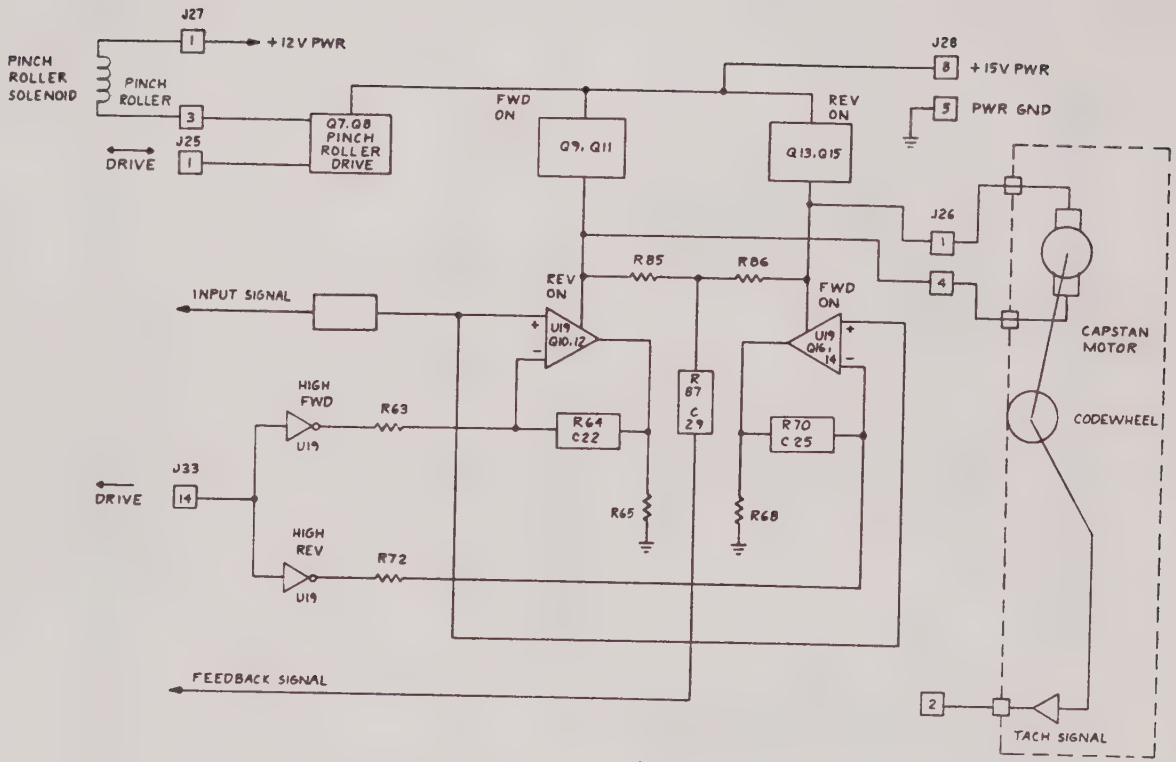

Figure 4-12. Capstan Servo Assembly Block Diagram, Sheet 3

Table 4-7. Capstan Servo Signal Processing

TAPE SPEED	TACH FREQUENCY	DIVIDED BY =	REF.FREQ.
37.5	125kHz	10	12.5kHz
30	100kHz	8	12.5kHz
15	50kHz	4	12.5kHz
7-1/2	25kHz	2	12.5kHz
3-3/4	12.5kHz	1	12.5kHz
1-7/8	6.25kHz	1	6.25kHz
15/16	3.125kHz	1	3.125kHz
15/31	1.56kHz	1	1.56kHz
0.375	1.25kHz	1	1.25kHz

Table 4-8. Capstan Servo Assembly Speed Logic

		Binary						Decade		
SPEED	30	15	7-1/2	3-3/4	1-7/8	15/16	15/32	37.5	3.75	.375
A	0	1	0	1	0	1	0	0	1	0
Speed B	0	0	1	1	0	0	1	0	0	1
Lines C	0	0	0	0	1	1	1	0	0	0
BIN/DEC	1	1	1	1	1	1	1	0	0	0

voltage represents the average value of the phase comparator voltage and is used to drive a power amplifier after first passing through the phase correction amplifier U16 and its associated circuitry. The phase correction amplifier provides loop stability.

The power amplifier is a bridge configuration and allows for reversal of the motor current. The power drive transistors are Q11, Q12, Q13, and Q14.

U19 has a dual purpose as an analog signal amplifier and a direction switching amplifier.

To provide for gentle starting of the capstan motor, a time dependent ramp is applied at the beginning of the cycle.

4-15. Tension Sensing Assembly

The Tension Sensing Assembly is part of a feedback control system. This system is used to maintain constant tape tension under all reel conditions. The system also contains an EOT sensor.

This assembly consists of a spring-loaded spindle mounted on ball bearings with a coupled optical cam riding through a photon-coupled interruption module.

A coil spring exerts a torque on the shaft which is proportional to the angle of rotation of the spindle shaft. Anchor holes allow spring tension adjustment.

At one extreme of the spindle travel, the photon-coupled interruption is blocked by the shutter cam. At the other end of travel, the interruption is completely unblocked. In between, the photon stream is partly blocked.

The interruption output voltage is proportional to the angle of rotation. Because of the summation of the two effects, torque vs. angle and output vs. angle, torque vs. voltage can be translated into tape tension.

The spring tension can be adjusted by moving the spring anchor point. Table 4-8 shows the correct tape tension for both configurations of the recorder.

Table 4-9. Tape Tension

Tape Size	Tension
1/4"	13 oz. (±2 oz.)
1/2"	13 oz. (±2 oz.)

4-16. Power Supply Assembly

The Power Supply, See Figure 4-13 for Power Supply Assembly block diagram, converts facility power (120V or 220V AC) into the DC voltages used to operate the 6500 recorder.

The AC facility voltage is first filtered by an AC power line filter (see detail A of Figure 4-13). The system is protected by a 3 amp fuse accessible at the rear of the recorder on the Power Supply Assembly. Also, the use of both 120VAC and 240 VAC is provided. (Refer to page 2-5, paragraph 2-9 for the 120 VAC - 240 VAC or 240 VAC - 120 VAC conversion procedure).

The +12V power is supplied by transformer T4 and regulating network CR5, CR6 and U1, which makes up a separate power supply for 12 VDC required for the .

The 115 VAC input for the operation power and signal voltages used by the recorder is rectified by the CR1 - CR4 rectifier and capacitor assembly.

U1	+5V out
U1,U2	± 12V out
U3,U6,U5	± 10V tracking output regulators
U4,Q1,Q3,Q4	± 10V controlled by record input

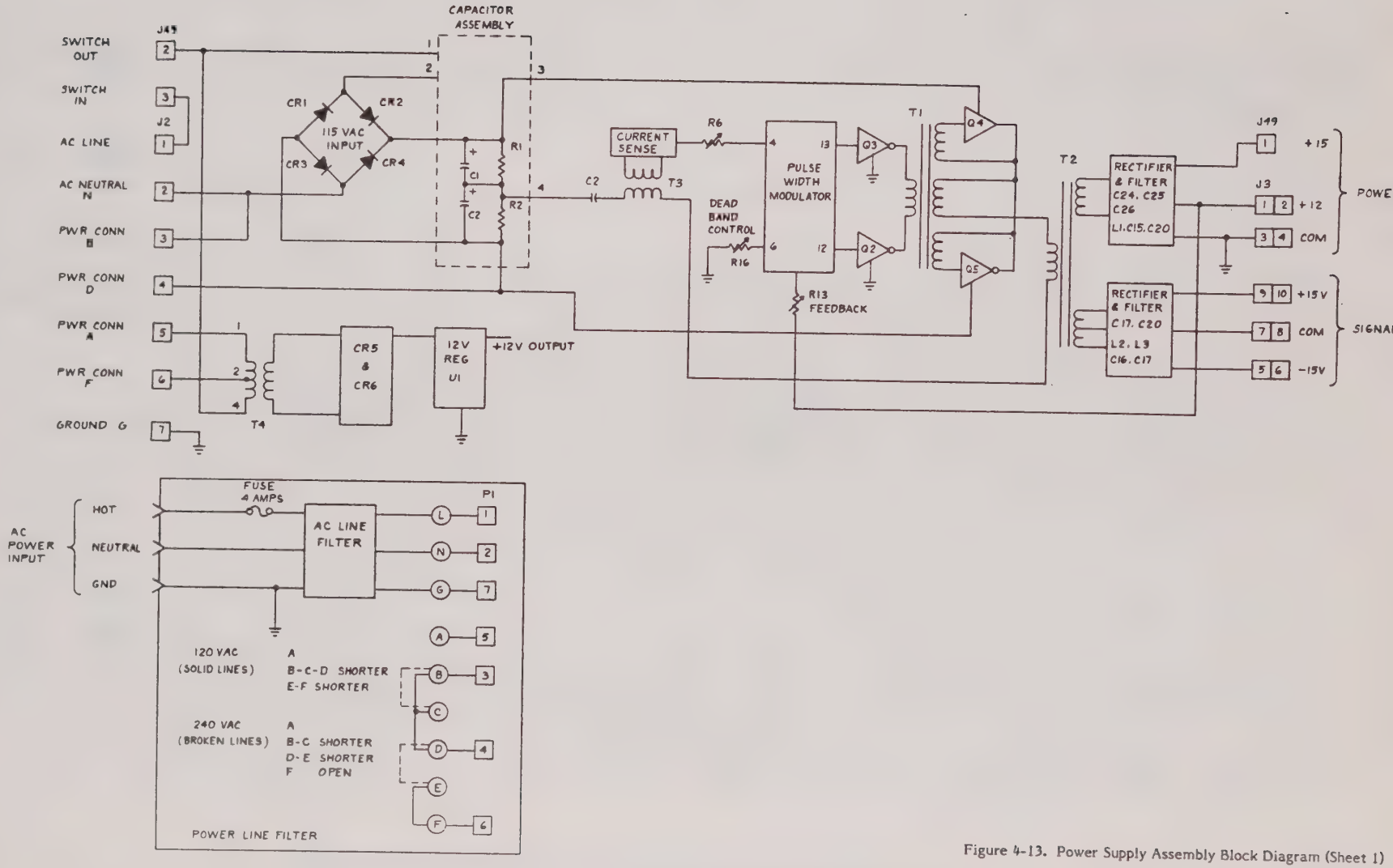

Figure 4-13. Power Supply Assembly Block Diagram (Sheet 1)

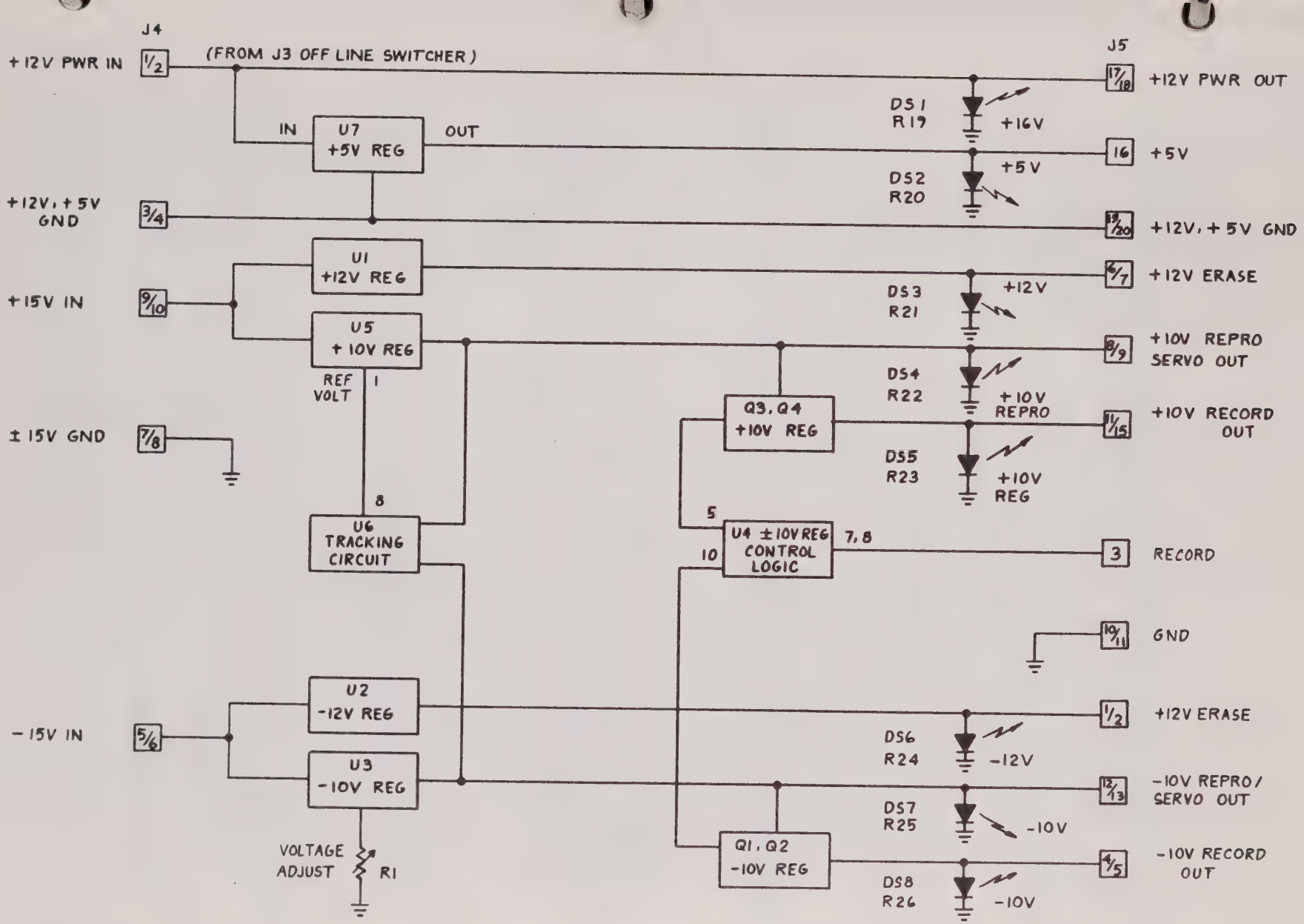

Figure 4-13. Power Supply Assembly Block Diagram (Sheet 2)

4-17. Calibrator Module

The calibrator module is designed to perform all of the functions necessary to calibrate the Gould 6500. The measurements the calibrator provides are:

DC Voltage
AC Vrms
AC dB
Distortion

The internal waveform generator provides:

DC Voltage
Sine Waves
Square Waves
Triangular Waves
15.12 kHz Distortion Signal

The calibrator also contains a frequency counter. For instruction on the use and maintenance of the calibrator, refer to the Gould Calibrator Manual which provides all operation instructions necessary to maintain the Gould 6500 and its modules.

4-18. FM Module

The FM Record/Reproduce Module is a complete FM system capable of recording and reproducing FM data. The module can be operated in any of four different configurations (IRIG Wideband Group I, IRIG Intermediate Band, IRIG Low # Band, or Decade). Figure 4-14A and 4-14B are the FM module block diagrams. Record performance is shown in Table 4-9. Table 4-10 lists the bandwidth at different speeds for each machine configuration. Table 4-11 lists the carrier frequency response at different speeds for each machine configuration.

4-19. Record Circuitry

The record half of the module receives the input signals which are then attenuated by the 7-step input attentuator U27 and resistor network R1 through R8. U29 and R121 form the front panel gain adjust feedback loop which sends the signal to low pass filter U28. U28 limits the input signal bandwidth, R107 being the DC offset front panel adjustment.

The signal level is adjusted by R78 and center carrier Frequency Adjustment R77. U30 acts as an amplifier driving VCO U31. U30 is controlled by the positive, negative, unipolar/bipolar front panel adjustment S2. U25 divides the modulated square wave signal from VCO U30 to intermediate, low, and wideband signals which then are sent to the U20, 21 down counters and the U17, U18 and U26 select speed gates which select the proper speed of operation.

The output driver and filter U33 then passes the FM Carrier output to the bias head mixer.

Comparators U13 and U24 with adjustments R96 and R97 form the negative and positive overload circuitry during lamp DS2.

4-20. Reproduce Circuitry

The reproduce section receives the differential preamp signal and U7 converts it to a single ended signal which is filtered by select preamps Z1, Z2, and Z3. The filter outputs are normalized and sent to U6 which selects the correct operating speed. The carrier level is adjusted by R21.

U5 amplifies the signal and drives the limiter U2. The limiter (square wave) output is sent to doubler U11 which converts the square wave and sends the pulse to discriminators U12, and U13. The demodulated signals are then filtered by Z4, Z5 and Z6 and then sent on the U19 filter select gates and U8. U15 and resistors R74, R75 and R76 controls the zero speed adjustment.

A FAST command on Pin 9 disables the FM reproduce by initiating a squelch from U13 and U14. The squelch, no carrier disables the select gate U19 through the filter select logic U16.

Squelch level is controlled by R22 via U3 and U4 which triggers U14 to turn on Q1 or Q2 to give a carrier (green) indicator (lights DS1) or a wrong speed (red) indicator (lights DS2).

The speed lines determine which speed the filters Z4, Z5 and Z6 select via 3 line to 7 line encoder U1 and filter logic U16.

Flutter compenstaion can be selected by placing the jumper from E5 to E6 the NORMAL position to E5 to E7. Flutter compensation can be adjusted with R119.

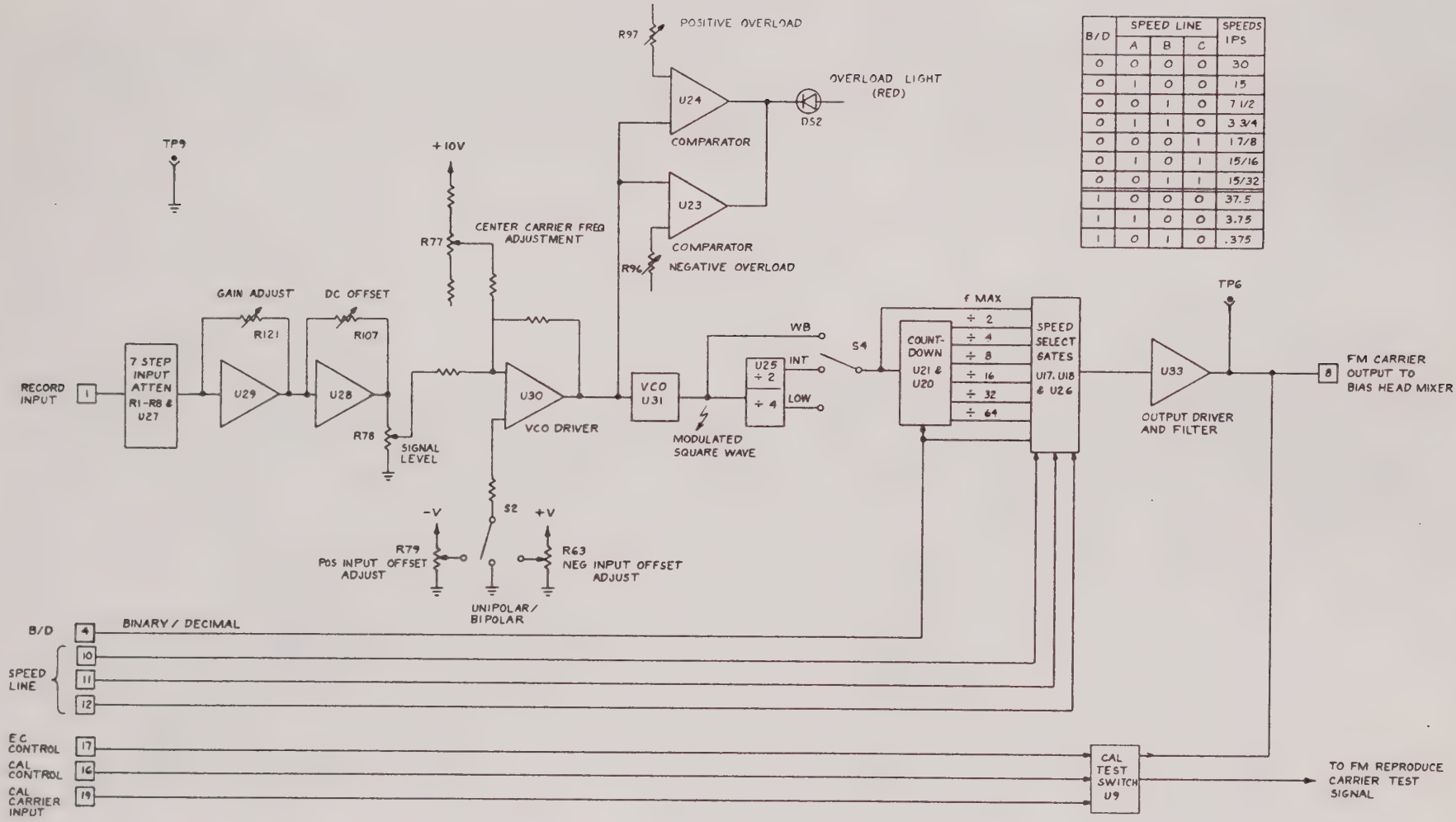

B/D	SPEED LINE			SPEEDS IPS
	A	B	C	
0	0	0	0	30
0	1	0	0	15
0	0	1	0	7 1/2
0	1	1	0	3 3/4
0	0	0	1	1 7/8
0	1	0	1	15/16
0	0	1	1	15/32
1	0	0	0	37.5
1	1	0	0	3.75
1	0	1	0	.375

Figure 4-14A. FM Module Record Circuit Block Diagram

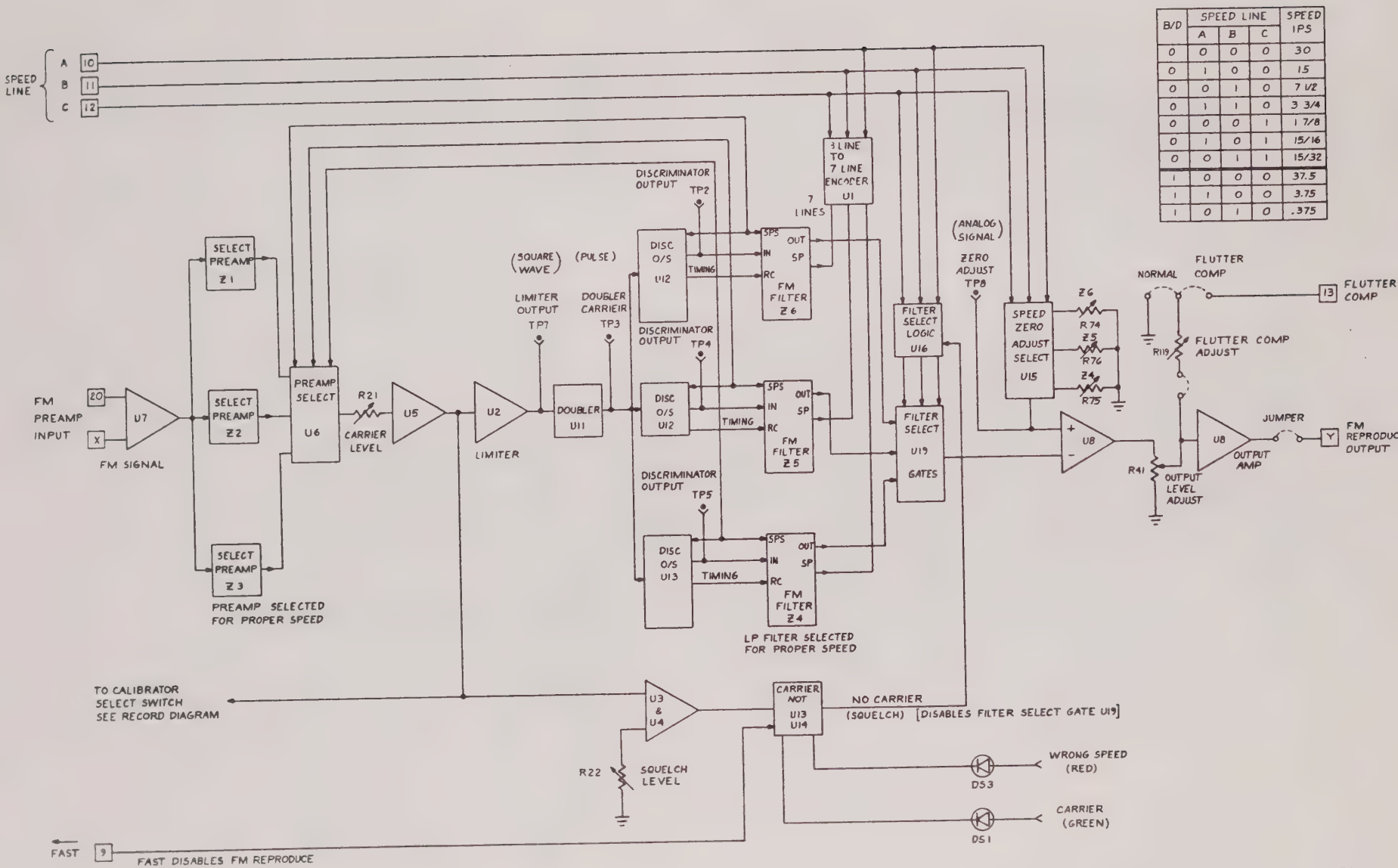

B/D	SPEED LINE A	B	C	SPEED IPS
0	0	0	0	30
0	1	0	0	15
0	0	1	0	7 1/2
0	1	1	0	3 3/4
0	0	0	1	1 7/8
0	1	0	1	15/16
0	0	1	1	15/32
1	0	0	0	37.5
1	1	0	0	3.75
1	0	1	0	.375

Figure 4-14B. FM Module Reproduce Circuit Block Diagram

Table 4-10. Record Section Performance

1. Input Sensitity

   Attenuator input is in Volts Peak-to-Peak.

2. Input Impedance

   100 K ohm unbalanced to ground

3. Carrier Frequency (See Table 4-11)

4. Center Carrier Drift

   1% over the temperature range of +5°C to +50°C ambient

5. Gain Drift

   1% over the temperature range of +5°C to +50°C ambient

6. Output Level

   0-7 volt squarewave into a 1 K ohm load.

Table 4-11. Bandwidth (Hz)

SPEED (IPS)	MACHINE CONFIGURATION			
	Low Band	Int. Band	Wd. Band	Decade
0.375	--	--	--	125
15/32	78	156	313	--
15/16	156	313	625	--
1-7/8	313	625	1.25K	--
3-3/4(3.75)	625	1.25K	2.5K	1.25K
7-1/2	1.25K	2.5K	5K	--
15	2.5K	5K	10K	--
30	5K	10K	20K	--
37.5	--	--	--	12.5K

Table 4-12. Carrier Frequency Response (kHz)

SPEED (IPS)	MACHINE CONFIGURATION			
	Low band	Int. Band	Wd. Band	Decade
.375	--	--	--	0.675
15/32	0.422	0.844	1.688	--
15/16	0.844	1.688	3.375	--
1-7/8	1.688	3.375	6.75	--
3-3/4(3.75)	3.375	6.75	13.5	6.75
7-1/2	6.75	13.5	27	--
15	13.5	27	54	--
30	27	54	108	--
37.5	--	--	--	67.5

At this point the carrier is doubled and used to drive the demodulators U12 and U13. The demodulated signals are then filtered by Z4, Z5, and Z6. U8 and U19 provide the final speed selection, DC end shift, and the output driver.

Table 4-12 gives the reproduce performance specification.

The FM system performance is shown in Table 4-13.

Table 4-13. Reproduce Section Performance

1. Input Sensitivity

   The input carrier must be 150 mV rms min. to 450 mV rms max., line to line at 3-3/4 ips (Intermediate Band). These levels are proportional at other speeds.

2. Frequency Response

   The frequency response for all configurations using the "flat response segments" of the filter is ± 0.5dB from DC to the top of the bandwidth.

   The frequency response of the "linear phase segments" of the filter is ± 1.5dB from DC to top of the bandwidth. The phase response of the "Linear phase segments" shall be linear over the bandwidth within ± 3°.

3. DC Drift

   ± 1.0% for each 10°C change from $+5^{o}$C to $+50^{o}$C ambient.

4. Output Level

   1V rms with a 75 ohm load.

Table 4-14. FM System Performance (E to E Mode)

1. Linearity

   ± 0.5% of full deviation from +5°C to +50°C ambient.

2. Harmonic Distortion

   Total harmonic distortion is a maximum of 0.5% for frequencies up to 1/3 of the bandwidth.

3. Signal-to-Noise Ratio

   -55dB

4-21. Direct Record/Reproduce Module

The Direct Module provides the Gould 6500 with the circuitry for a complete direct record/reproduce system. The module is designed to be operated in the IRIG Intermediate Band at any one of nine tape speeds. Figures 4-15A and 4-15B are block diagrams of the module's two sections.

4-22. Record Section

The record section accepts signals by way of a seven-step input attenuator R1 through R8. Variable gain amplifier U1, operated by a control on the front panel (R7 record level) passes the signal to U2, a constant current amplifier, which drives the recording head.

The **normal** and **overload** level indicators, CR1 and CR3, are controlled by U3 and U4 respectively. U3 is a linear current amplifier used to light the **normal** level indicator (CR1). U4 is a comparator used as an **overload** detector to light CR3 R17 is the Normal overload adjustment.

4-23. Reproduce Section

The reproduce section receives differential signals from the preamp PWB. U15 converts the signal to a single ended source. U14 is a mid-frequency equalizer. The feedback path is selected by switch U7 which selects one of eight resistors, one for each speed. Head differences and the low frequency adjust is controlled by C22.

U6 is an all pass amplifier which compensates for phase shift caused by the high frequency equalizer Q2. R39 adjusts U6 for the best mid-band square wave response.

The high frequency analyzer consists of Q2, a current source, and a set of resonant circuits, Q3 through Q11 and their associated components.

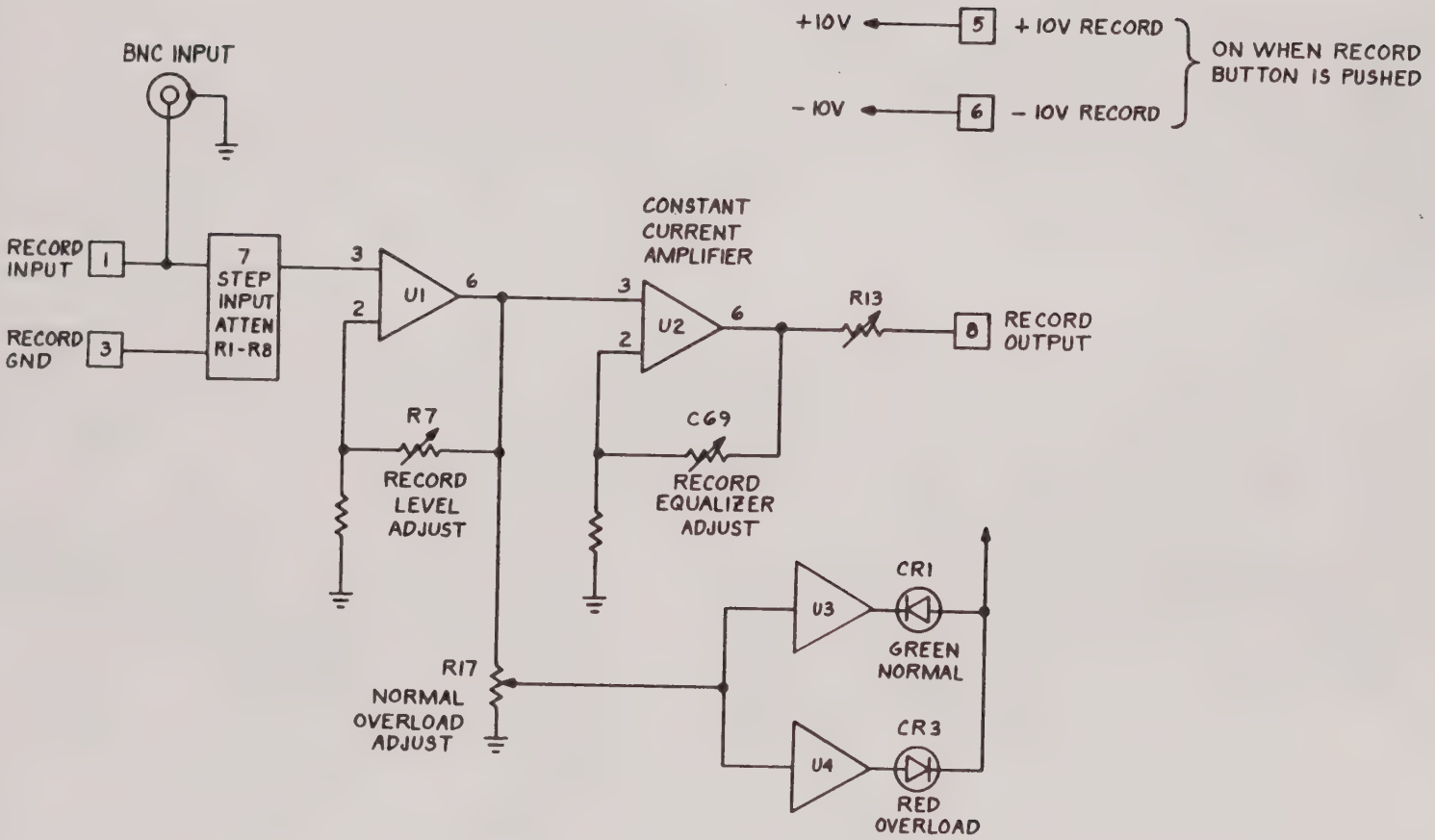

Figure 4-15A. Direct Module Record Section Block Diagram

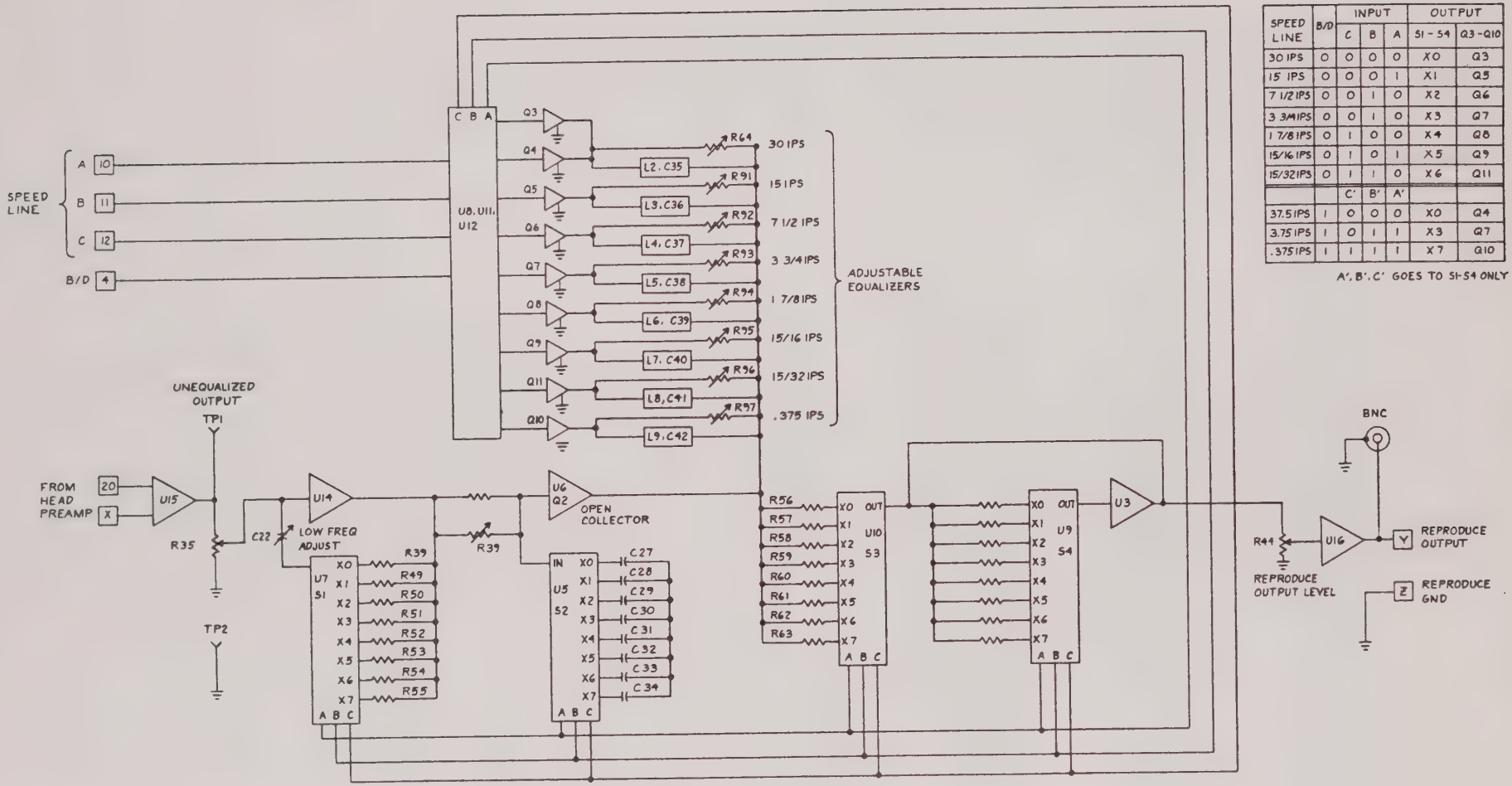

SPEED LINE	B/D	INPUT C	INPUT B	INPUT A	OUTPUT S1-S4	OUTPUT Q3-Q10
30 IPS	0	0	0	0	X0	Q3
15 IPS	0	0	0	1	X1	Q5
7 1/2 IPS	0	0	1	0	X2	Q6
3 3/4 IPS	0	0	1	0	X3	Q7
1 7/8 IPS	0	1	0	0	X4	Q8
15/16 IPS	0	1	0	1	X5	Q9
15/32 IPS	0	1	1	0	X6	Q11
		C'	B'	A'		
37.5 IPS	1	0	0	0	X0	Q4
3.75 IPS	1	0	1	1	X3	Q7
.375 IPS	1	1	1	1	X7	Q10

A', B', C' GOES TO S1-S4 ONLY

Figure 4-15B. Direct Module Reproduce Section Block Diagram

One of these circuits is selected for each speed by the U8, U11, and U12 speed select switch; the adjustment for each speed is made in the upper portion of the band of the speed selected. (R64, R91-R97). The signal is then amplified by U3 and passed to U16, R44 is the Reproduce output level adjust.

4-24. Audio Module

The Audio Module provides the 6500 recorder/reproducer with the capability of recording audio information for logging purposes, etc. The Audio Module utilizes a low impedance microphone input and provides a headphone output for retrievel of the audio signal. Figure 4-16 is the detailed block diagram.

4-25. Record Circuitry

The record portion of the Audio Module consists of amplifier U1 and the mircophone level adjustment circuit R4 (located on the front panel). U3 is the final amplification stage for recording with the U4, U4 CR1-CR6 and Q1 automatic gain control circuit. R22 is the CW compression adjustment and R24 is the FET bias adjustment. Q1 feeds back through Variable resistor U2 to automatically join U3.

4-26. Reproduce Circuitry

Reproduce Circuitry receives the audio signal from the preamplifier and it is filtered by L1 before it is passed on to U5 for amplification.

R32 adjusts the input of equalization and Low Pass filter U6 and U7. R45 adjusts the headphone level via driver U9.

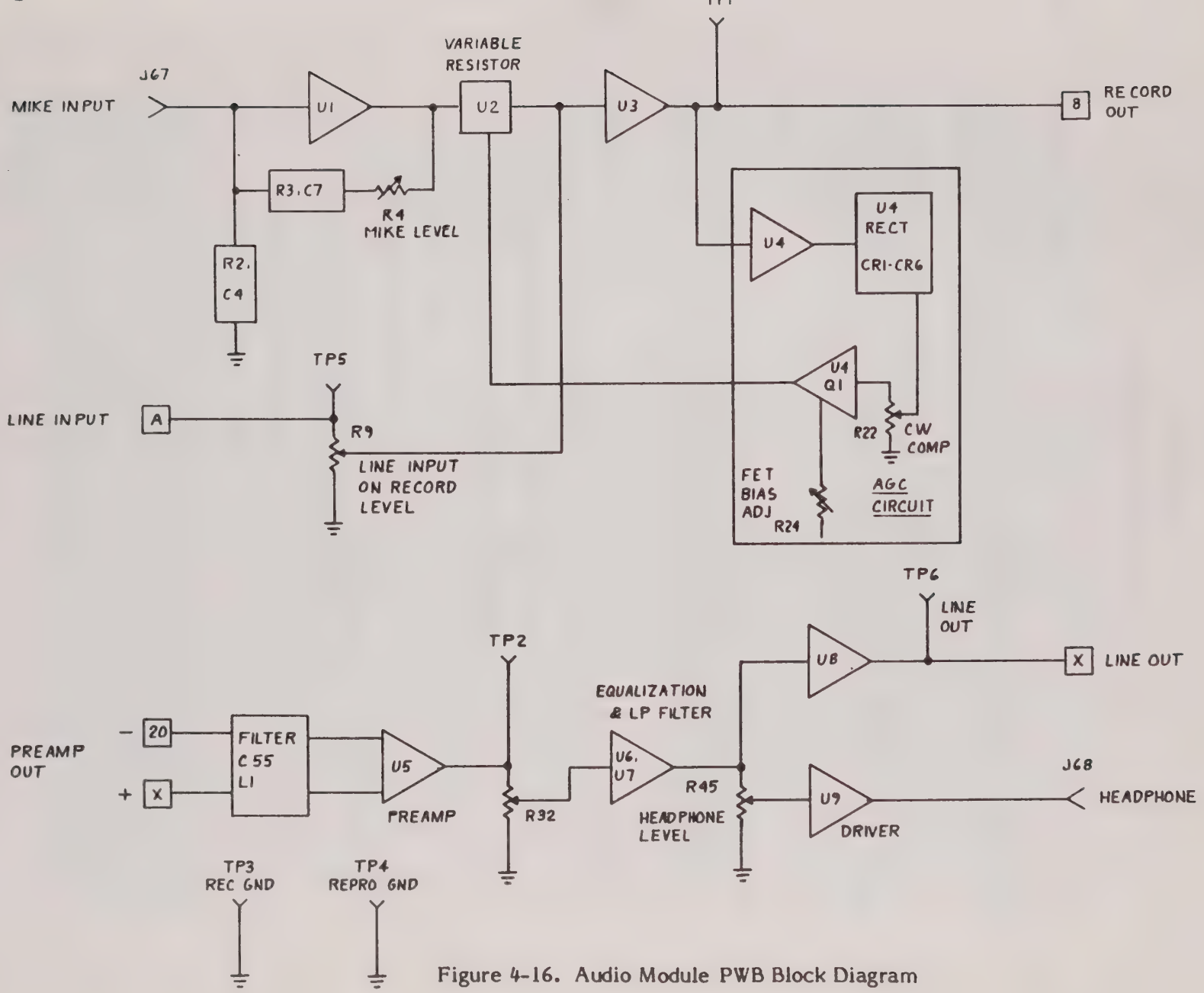

Figure 4-16. Audio Module PWB Block Diagram

SECTION V.

PREVENTIVE MAINTENANCE

5-1. INTRODUCTION

The procedures in this section are to be used as a periodic preventative maintenance program. These procedures will enable a technician and/or operator to perform checkout and adjustment of several of the recorder's mechanical functions.

This section can further be used as a troubleshooting guide, if a malfunction is suspected, to localize that malfunction. Calibration, Diagnostics and Troubleshooting are presented in the following sections, VI and VII, respectively. They will be referred to, as required, if the repair of the malfunction is out of the scope of this section.

5-2. Scope

Cleaning of the recorder, tape path and demagnetizing of the heads are in Section III, Operation. This section contains only those adjustments that can be made to the recorder without disassembly beyond the removal of the protective panels. Panel removal is described in Section VIII, Assembly/Disassembly.

5-3. Maintenance Checks

The maintenance checks that are to be made periodically are as follows:

- Demagnetized heads (see Section III, Operation)
- Tape path cleaning (see Section III, Operation)
- Power Supply
- Switch/Indicator Lamps
- Tension Sensor Adjustment (for Recorder S/N 1 to 30. Recorder's with S/N's 31 and up requires no adjustment).
- Brake Torque Adjustment Check
- Pinch Roller Adjustment

These maintenance checks are described in the following paragraphs. For further troubleshooting, refer to Section VII, Diagnostic and Troubleshooting Procedures, which provides the information required to troubleshoot and diagnose recorder and module functional problems. Section VI, Calibration, provides the calibration procedures for the recorder's basic modules such as the Control PWB, Bias Driver PWB, etc. Calibration of the record/reproduce plug-in modules and the calibrator are provided in the Gould Calibrator Manual, the RCU in the Remote Control Unit Manual.

5-4. Power Supply Check

a. Attach power cord to the recorder and plug in to facility power source.

b. Press POWER ON (Green) switch indicator and verify that POWER ON and STOP switch lamps light. DISPLAY switch lamp will light if DISPLAY switch is selected.

c. At the power supply (right rear panel of the recorder) verify that LED indicators +16V, +10V, +5V, -10V are on. +10V REC and -10V REC LED indicators are OFF. Press RECORD switch on front panel, the +10V REC and -10V REC LED indicators will light.

d. If power supply LED indicators do not light, check the main panel switch indicators.

e. If no main panel switch indicators or power supply lamps are lit, check power cord for proper connection and broken connector; check main fuse on back of recorder next to power cord connector.

f. If the fuse is blown, replace (see Fuse Requirements Table 1-3, Section I for proper fuse size and rating.)

g. If after replacing the fuse and checking the power cord the recorder does not operate, replace the power supply.

5-5. Switch Function and Indicator Lamps Check

a. Mount and thread tape on the recorder.

b. Attach power cord to recorder and facility power. Press power switch (green) on the front control panel to ON.

c. Verify that each switch is operational by putting the recorder into each operational mode (see Gould Operator's Guide).

NOTE

TAPE RDY switch indicator will light only if a signal has been recorded on one of the DIRECT tracks. The TACH SYNC switch indicator will light in DRIVE mode when the capstan motor is at the selected speed.

d. If switches work but lamps do not light, replace the lamp bulb.

1) To remove switch lamp bulbs, first turn recorder power to OFF.

2) Using a flat sharp instrument such as an Exacto knife carefully pry off the switch indicator lens.

3) Remove the bulb using a pilot bulb remover (Microswitch #15PA19) or equivalent. Grasp the bulb with the pilot bulb remover and pull straight out from the switch assembly. **DO NOT TURN** the bulb.

4) Using the reverse procedure, replace the bulb.

5) To replace the switch indicator lens, press it back onto the switch until it snaps back into place. Be sure that the switch indicator lens is replaced with the placarding oriented so that it can be read.

e. If switches do not work (they do not put the recorder in the proper operating mode when activated) refer to Section VII, Diagnostic and Troubleshooting procedures.

5-6. Tension Sensor Adjustment Check

NOTE

On Recorders S/N 31 and up there is no tension sensor adjustment as it is preset in the factory. Tension may also be checked using a tension meter while the recorder is in a drive mode.

a. Remove wraparound cover exposing the Tension Sensor Assembly at the top of the recorder. (Refer to Figure 8-6.)

b. Raise the display PWB located on the top of the recorder by unfastening the plastic press locks.

NOTE

Air pots are factory adjusted only. Do not attempt to adjust the air pots as they are not field adjustments.

c. Locate spring tension adjustment (two places) for the left and right tension sensors. (Refer to Figure 8-6). The spring tension adjustment is next to the air pot. (See Figure 8-6 reference (A)).

d. Attach spring scale to the right tension sensor tape guides so that as the scale is pulled upward, the tension sensor turntable rotates counterclockwise.

e. Read the scale when the tension sensor tape guides are in the horizontal position.

f. The scale should read 3 oz. (±1 oz.) for 1/4" and 4 oz. (±1 oz.) for 1/2" recorders.

g. If the tension readings are not within tolerance, adjust the spring tension for that tension sensor turntable by turning the spring tension adjustment screw until proper tension is achieved. Rotate the locknut to hold adjustment screw in place.

h. Repeat this procedure for the left tension sensor.

5-7. Brake Torque Adjustment Check

a. Remove the front cover and top trim from the recorder to expose the brake solenoids (refer to Figure 8-2). If adjustment is necessary.

b. Place a empty reel on either turntable (this procedure is to be used to test either brake).

c. Attach one end of a cord to the reel as shown in Figure 5-1 and attach a pull scale to the other end of the cord.

d. Apply power and place the recorder in the STOP mode.

NOTE

Pull the right side turntable so that the reel rotation is counterclockwise. Pull the left side turntable so that the reel rotation is clockwise.

e. Pull the scale upward as shown. The tension measurements should be within 43-57 oz. in.

f. Repeat the procedure for the other turntable and brake.

g. If the brake torque measurement is not within the tolerance shown, adjustment can be made to the brake solenoid by turning the adjustment nut to change the tension on the solenoid spring. (Refer to Figure 8-2, reference 15.)

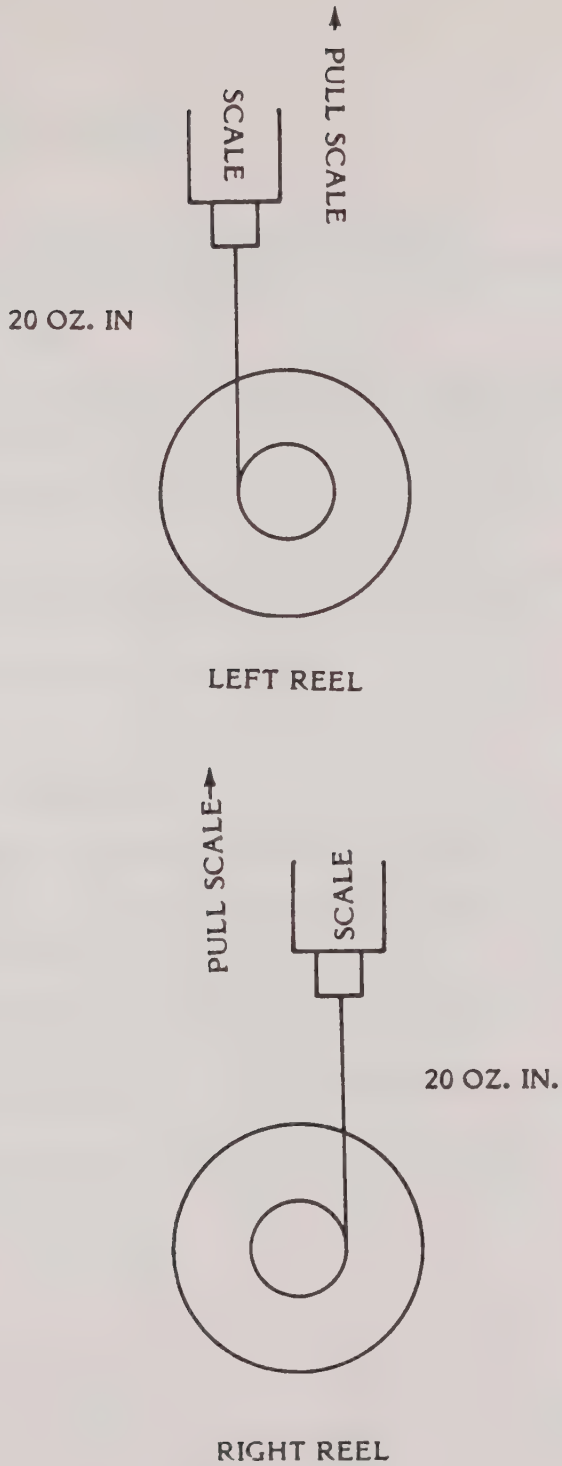

Figure 5-1. Brake Torque Measurement

5-8. Pinch Roller Adjustment Check

NOTE

It is imperative that the tape is pulled exactly vertical to achieve a true measurement.

a. Remove head cover.

b. Disconnect Capstan by removing Servo/MDA module from its mounting and disconnecting cable P26 from J26 on the Servo/MDA PWB.

c. Take tension idlers out of the rest position. (No tape on machine) using rubber bands.

d. Put the recorder into DRIVE mode. Hold the capstan and measure just as the tape breaks away (See Figure 5-2. for test setup).

e. The tension should be 16 oz. ($\pm$1 oz.).

Alternate method:

a. Do steps a through d above.

b. Place a 1" wide piece of tape between the Capstan and pinch roller.

c. Attach the scale to the pinch roller so that it can be pulled to the right parallel with the precision plate without interference.

d. Pull tape to the front while simultaneously pulling the scale to the right and observing measurement.

e. Read the measurement just as the tape breaks free if the recorder.

f. The tension measured using this method should be 70-75 oz.

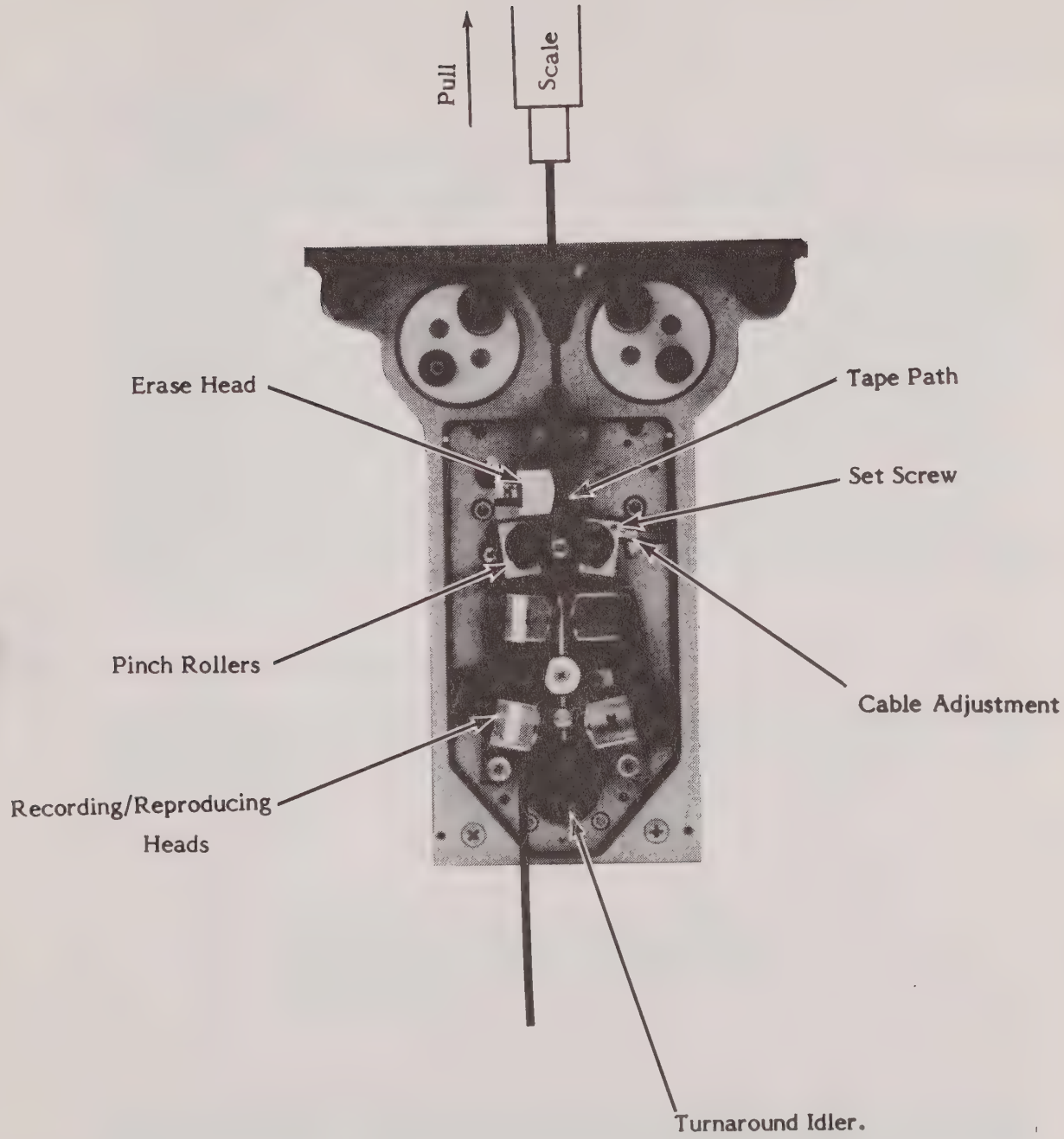

Figure 5-2. Pinch Roller Pressure Measurement

SECTION VI.

CALIBRATION

6-1. INTRODUCTION

Calibration is to be performed on a periodic basis as required to maintain the Gould 6500 within proper operating and performance specifications.

Calibration is to be performed by an experienced technician and/or operator and the procedures will explain only those adjustments that are required to maintain proper operating standards and performance. Test point and adjustment and component locations are located in text where reference to adjustments are made. All other test point, adjustment and location diagrams are in the back of this section. Adjustments requiring disassembly beyond the subassembly level will not be addressed. Only those test points and their requisite adjustments that are easily accessible will be discussed. Test setup block diagrams, test point locations, and adjustment locations are provided as necessary. These procedures are to be done with the wraparound and rear cover panels removed to facilitate easy access to the various subassemblies and their adjustments and test points. For removal of covers, see Section VIII, Assembly/Disassembly. Table 6-1, Calibration Sequence, lists the calibration procedures necessary for the Gould 6500. Table 6-2 lists test equipment required for calibration.

6-2. Control Logic Operation Test

This procedure is provided in order to determine the proper operation of the control switches and the Control Logic PWB. During the test procedure sequence in Table 6-3 verify that all of the switch lamps light when they are depressed.

NOTE

Power up speed, where indicated in Table 6-3, is determined by switch S8 on the Up/ Down switch logic PWB, Figure 6-1, when power is first applied.

Be sure to verify all recorder actions for a given step before executing the next step in the sequence. If any indication or action does not occur during this test, refer to Section VII, Diagnostics and Troubleshooting Procedures, to correct the problem.

Table 6-1. Calibration Sequence

1. Control Logic Operation Test
2. Transport Tape Tracking Adjustment
3. Transport Potentiometer Adjustment
4. Tape Lock Adjustment
5. Decade Operation Adjustment
6. Dynamic Skew Adjustment
7. Time Base Error Adjustment
8. Flutter Adjustment
9. Remote Control Logic Operation Test

Table 6-2. Test Equipment Required

1. AC Voltmeter
2. Signal Generator
3. Oscilloscope
4. Extender Cables
5. Flutter Meter
6. Calibrated FM and Direct Modules

Table 6-3. Control Logic Operation Test

Indicator Lamp Status X = ON

Step	Sequence Command Switch Operation								Tape Motion	Speed	Notes
	Power ON	X	X						None		
	Drive ▷ Record Erase	X		X		X	X	X	Forward	Power-Up Speed	1
	Stop	X	X						None		2
	Drive ◁ Record Erase	X			X	X	X	X	Reverse	Power-Up Speed	1
5	Drive ▷	X		X		X			Forward	Power-Up Speed	1 3
6	Fast	X						X	Forward	180 ips	1 3
7	Stop	X	X						None		2
8	Fast ◁	X							X Reverse	180 ips	1
9	Fast ▷	X						X	Forward	130 ips	1 3
10	Drive ▷	X		X		X			Forward	Power-Up Speed	1 3
11	Stop	X	X						None		2

Notes:
1. Pinch rollers press tape against capstan shaft
2. Pinch rollers retract from capstan shaft
3. Stop indicator lamp comes on momentarily
4. Display switch indicator will be on if selected.

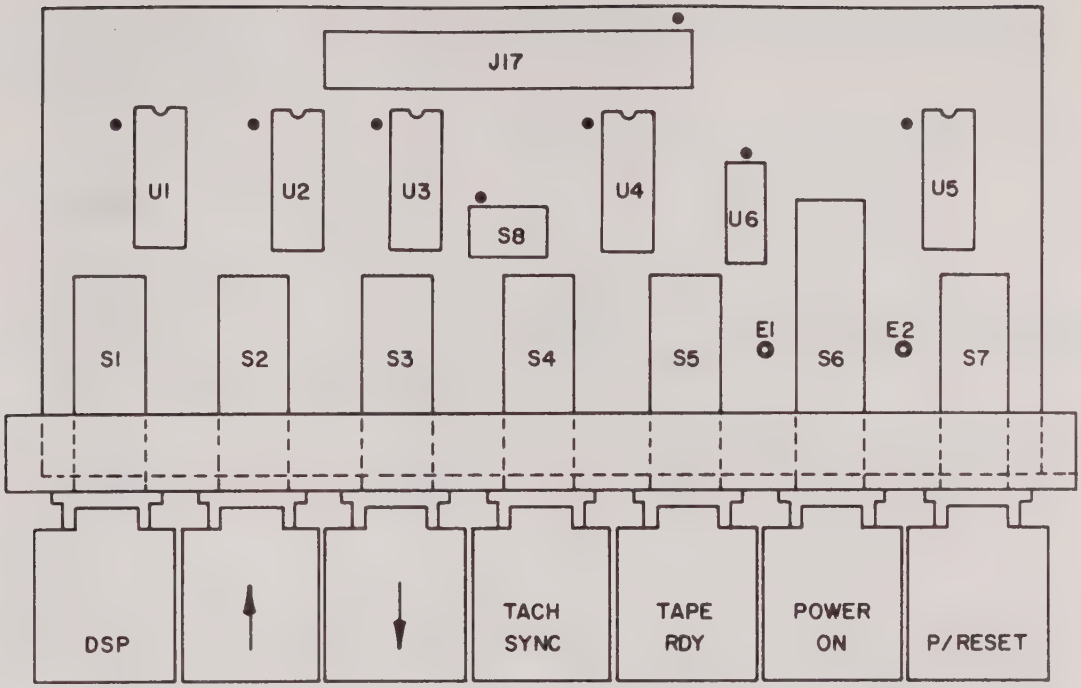

E1 - +12V
E2 - Ground

S8 - Start-up Speed Selection Switch

Figure 6-1. Up/Down Switch Logic PWB Components Location Diagram

6-3. Transport Tape Tracking Checkout

Connect the recorder and the test equipment as shown in the test setup block diagram Figure 6-2. Install a degaussed test tape and a calibrated direct module on the recorder. Proceed as follows:

a. Connect the signal generator to the direct module IN connector (BNC).

b. Set frequency to 150 kHz at 1 Vrms.

c. Connect ACVM and oscilloscope to the direct module OUT connector.

d. Apply power to the recorder and press DRIVE FWD ▷ and record at 30 ips. Verify a 150 kHz signal output and note the output level on the ACVM. Record approximately 100 feet of signal.

e. Press DRIVE REVERSE ◁ and note the signal output level. The difference in output amplitude between step 4 and step 5 shall not be more than 1 1/2 to 2 dB.

f. Go to paragraph 6-4.

6-4. Transport Servo Gain Potentiometer Adjustment

a. Loosen mounting screws on Servo module to allow access to potentiometers for adjustment, see Figure 6-9 for component locations. DO NOT disconnect electrically. Take tension idlers out of EOT by using rubber bands, or install tape.

b. Apply facility power and turn on recorder.

CAUTION

During this procedure, be careful of exposed circuitry. Observe proper caution to prevent injury to personnel or damage to the recorder.

c. On reference oscillator PWB, set S1 (BIN/DEC switch) to binary UP position or decade DOWN position as desired (refer to Figure 6-3 and 6-4 for location.

NOTE

Place jumper on capstan servo module to desired mode. E1 to E3 and E4 to E6 for binary, E1 to E2 and E4 to E5 for decade. (Refer to Figure 6-9 for jumper and test point locations).

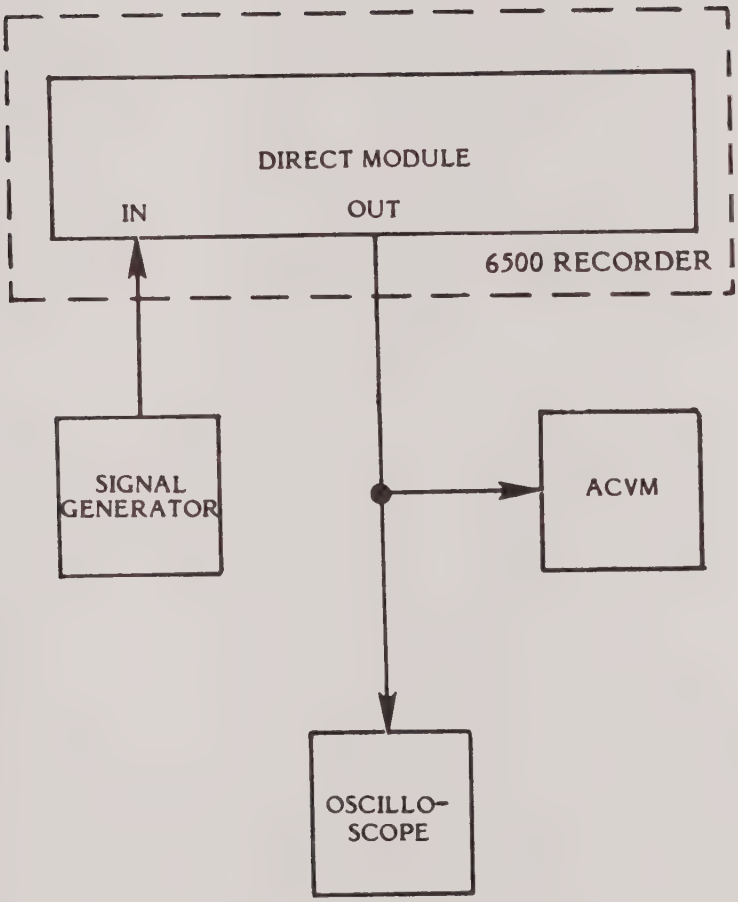

Figure 6-2. Transport Tape Tracking Adjustment Test Setup Block Diagram

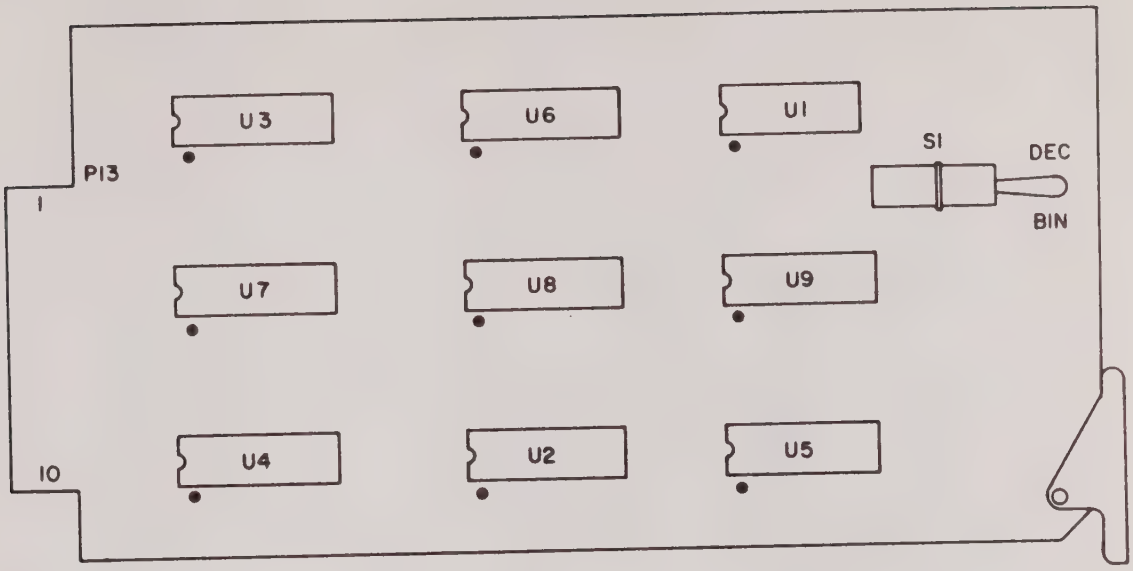

Figure 6-3. Reference Oscillator PWB Components Location Diagram

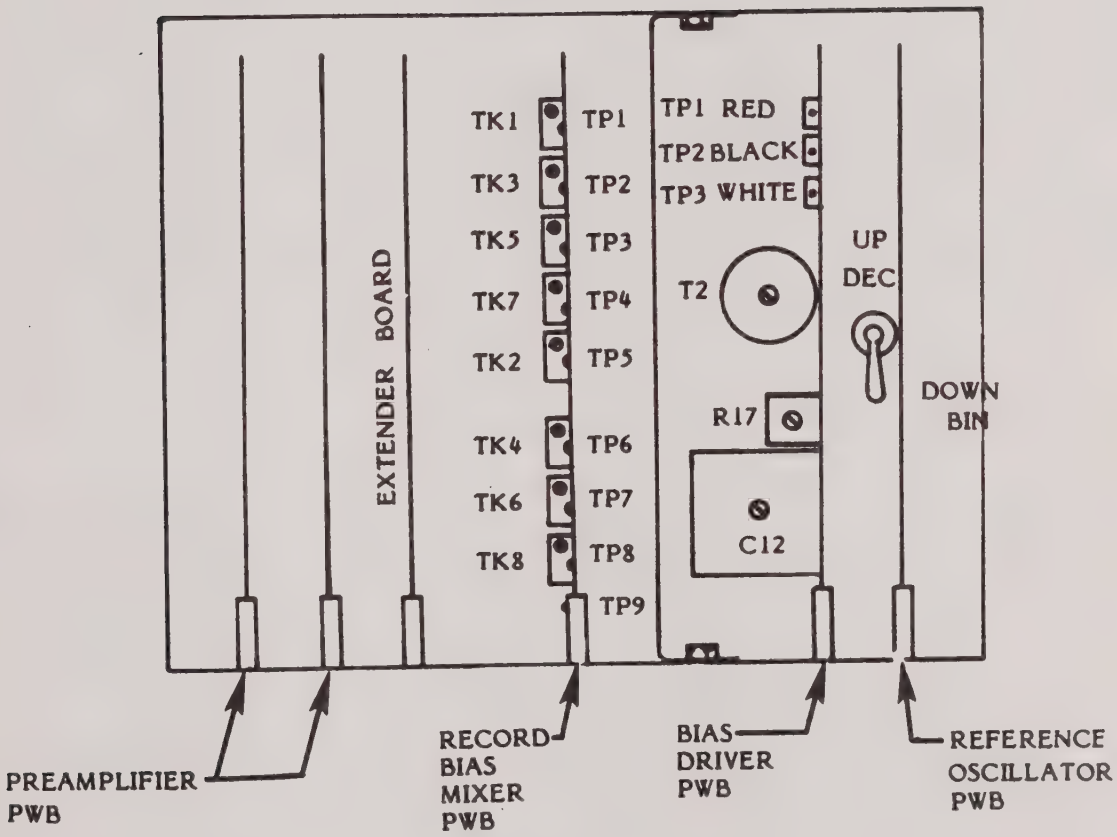

Figure 6-4. Rear Card Cage Test Point, Switch, and Potentiometer Locations

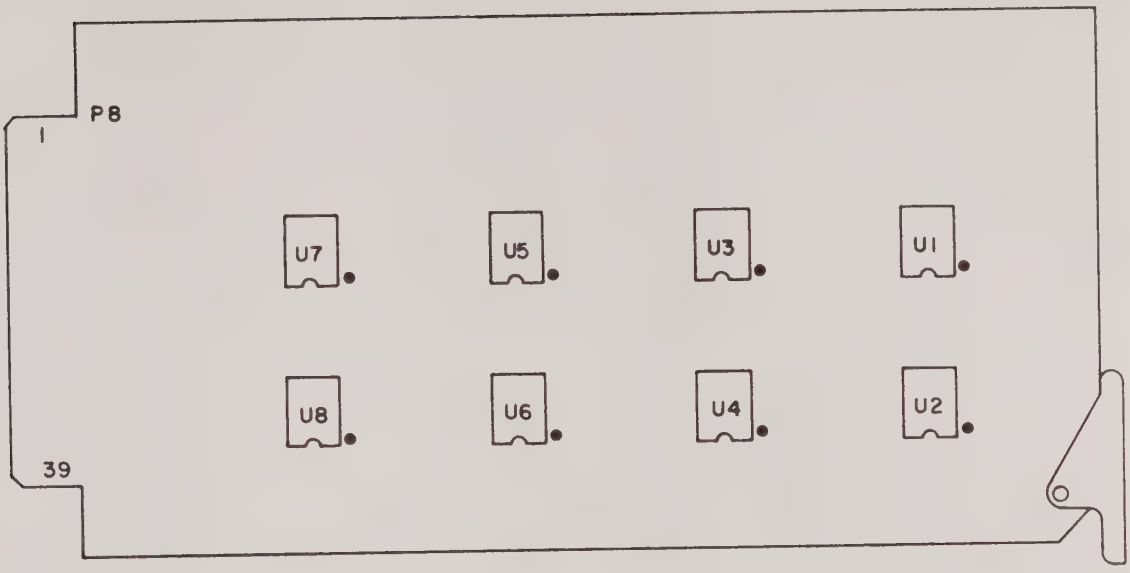

Figure 6-5. Preamplifier PWB Components Location Diagram

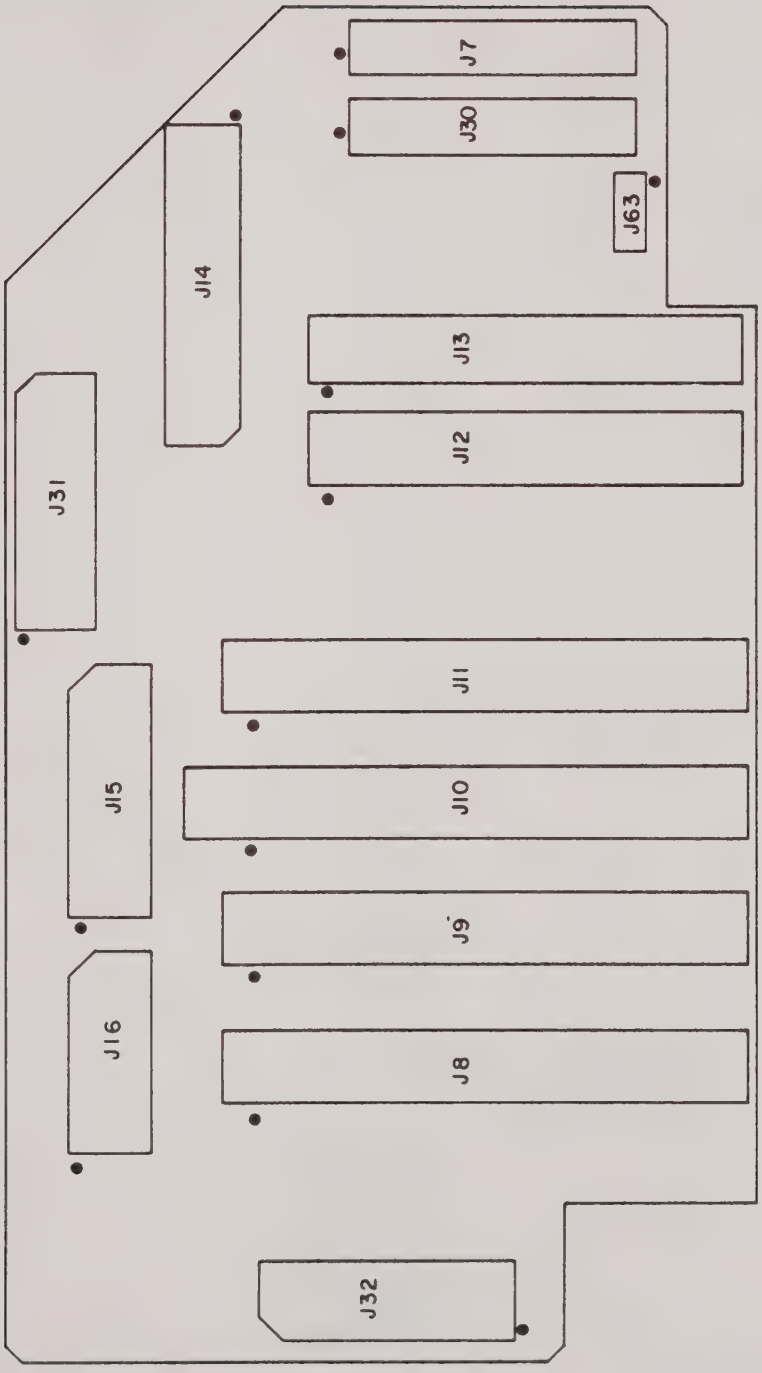

Figure 6-6. Preamplifier Interconnect PWB Components Location Diagram

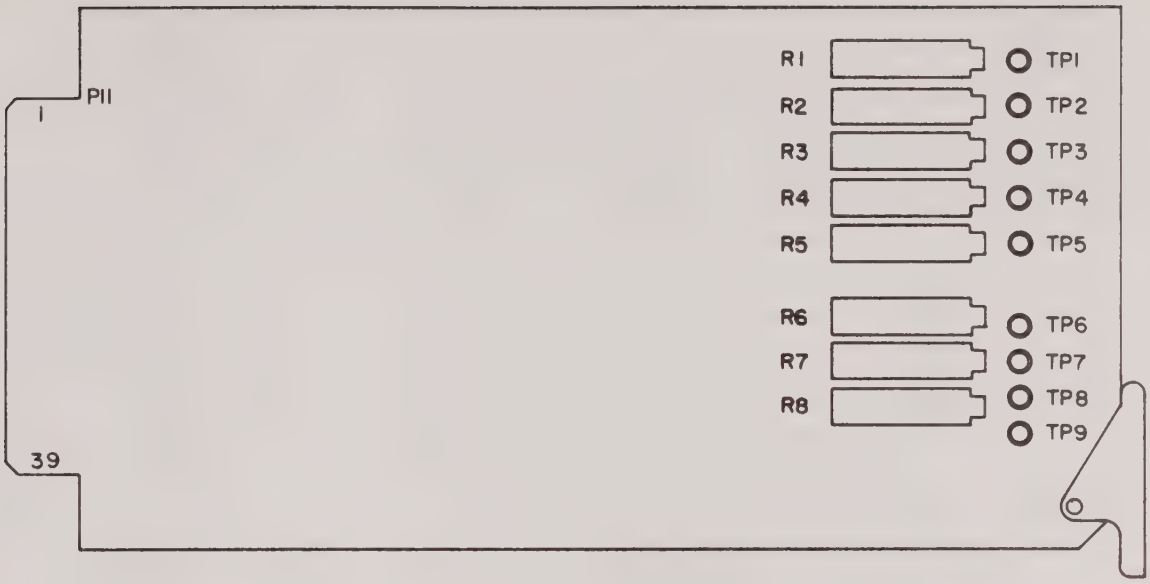

Record Bias Adjustment Potentiometers:

R1 - Track 1
R2 - Track 3
R3 - Track 5
R4 - Track 7
R5 - Track 2
R6 - Track 4
R7 - Track 6
R8 - Track 8

Record Head Return Test Points:

TP1 - Track 1
TP2 - Track 3
TP3 - Track 5
TP4 - Track 7
TP5 - Track 2
TP6 - Track 4
TP7 - Track 6
TP8 - Track 8

TP9 - Ground

Figure 6-7. Record/Bias Mixer PWB Components Location Diagram

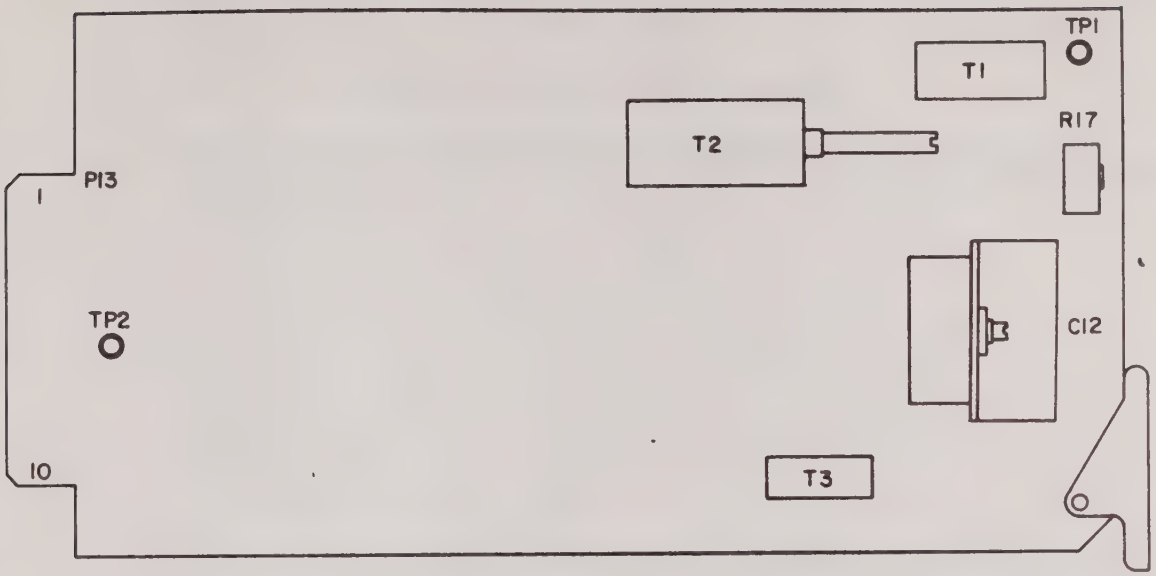

Test Points

TP1 - Bias Output
TP2 - Ground

Potentiometers

R17 - Erase current waveform adjustment

Figure 6-8. Bias Driver PWB Components Location Diagram

d. Servo Lock Adjustment TP7: Connect oscilloscope to TP7 on servo board (see Figure 6-9 for test point location).

e. Select 30 ips DRIVE FORWARD, verify squarewave.

f. While monitoring oscilloscope, adjust all speeds for proper duty cycle. Fine adjustment will be accomplished during the flutter adjustment procedure, paragraph 6-9.

*TAPE SPEED	% DUTY CYCLE
30 ips	50%
15 ips	25%
7-1/2 ips	33%
3-3/4 ips	50%
1-7/8 ips	50%
15/16 ips	50%
15/32 ips	50%

*This adjustment is for recorder in binary mode. For decade adjustments refer to paragraph 6-7.

g. Stop the recorder.

6-5. Counter Idler Test

a. Stop recorder, turn power off, and remount servo PWB on frame (refer to Section VIII for assembly). Remove tape and reels from recorder.

b. Connect oscilloscope to the control logic PWB test point TP8. (See Figure 6-11 for test point location).

c. Apply power to the recorder and turn idler by hand in either direction. Observe oscilloscope and verify squarewave and display reads out.

d. Turn OFF recorder.

e. Apply power and connect oscilloscope to TP1 on the right side of the reel amplifier PWB.

f. Move right side tension arm by hand through its full range. Verify that the output of TP1 goes from 0 to 10 Vdc smoothly with no dips and then return to zero as the tension air is returned to its original position.

NOTE

If dips are present, refer to the diagnostic troubleshooting procedure (Section VIII) and verify sensor disc misalignment. Refer to maintenance Section V to correct any deficiencies. Retest.

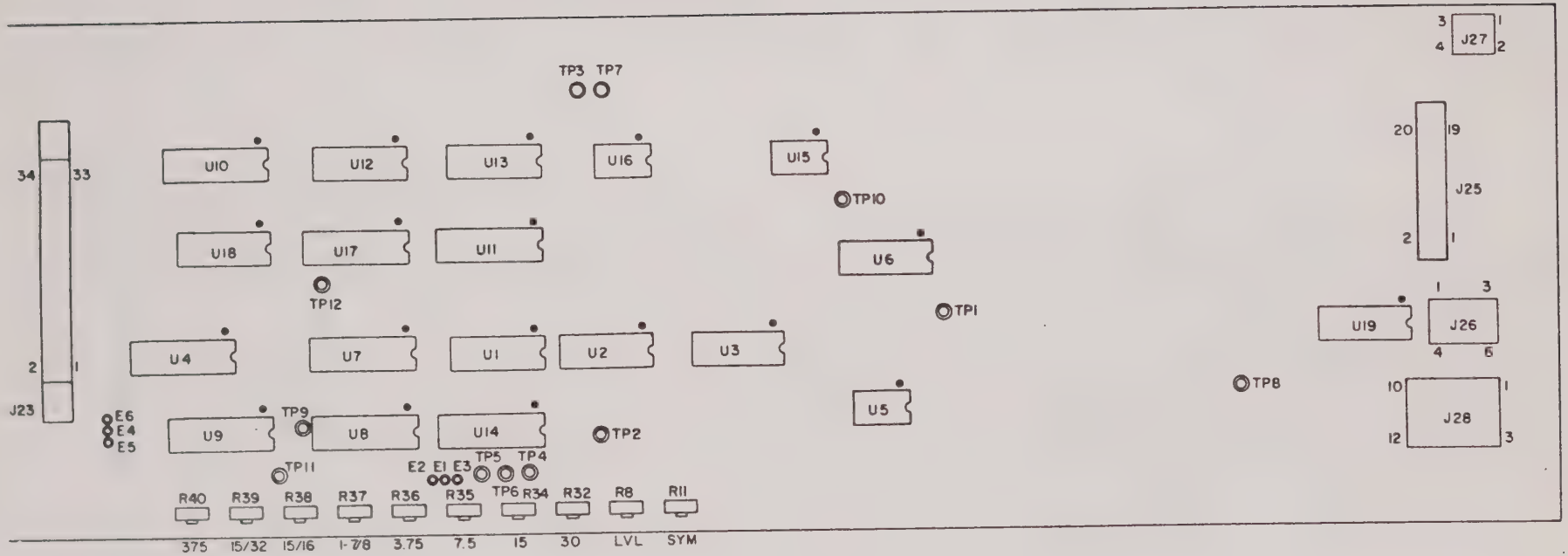

Test Points

TP1 - Tach
TP2 - Tape
TP3 - Servo Reference
TP4 - A Speed Line
TP5 - B Speed Line
TP6 - C Speed Line
TP7 - Phase Comparator
TP8 - Servo Error
TP9 - Ground
TP10 - Ramp
TP11 - Tape Level

Potentiometers

R8 - Tape Level
R11 - Symmetry
R32 - 30 ips or 37.5 ips
R34 - 15 ips (Binary) or 3.75 ips (Decade)
R35 - 7.5 ips
R36 - 3.75 ips
R37 - 1 7/8 ips
R38 - 15/16 ips
R39 - 15/32 ips
R40 - .375 ips

Jumper Connections

E1-2 - Decade
E1-3 - Binary
E4-5 - Decade
E4-6 - Binary

Figure 6-9. Servo/MDA PWB Components Location Diagram

Test Points

TP1 - Sensor Arm Position
TP2 - Servo Linear Output
TP3 - Signal Ground

Jumper Connections

E2 to E3 - Supply Reel: Assembly 300095-01
E1 to E2 - Takeup Reel: Assembly 300095-02

Potentiometers

R5 - DC Offset Adjustment
R13 - Fast Wind Adjustment

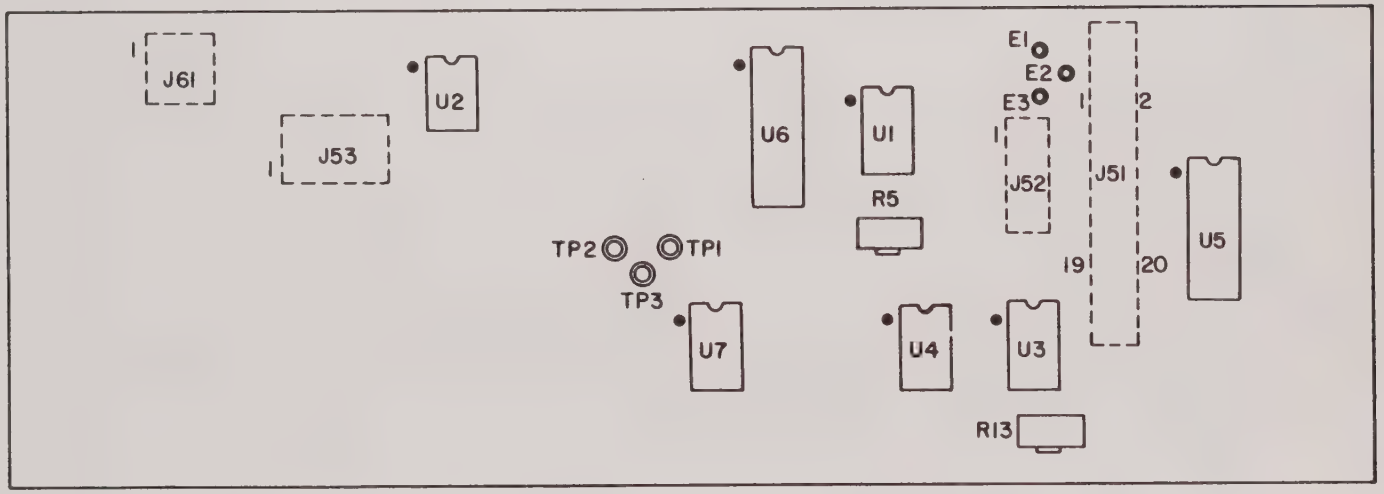

Figure 6-10. Reel Amplifier PWB Components Location Diagram

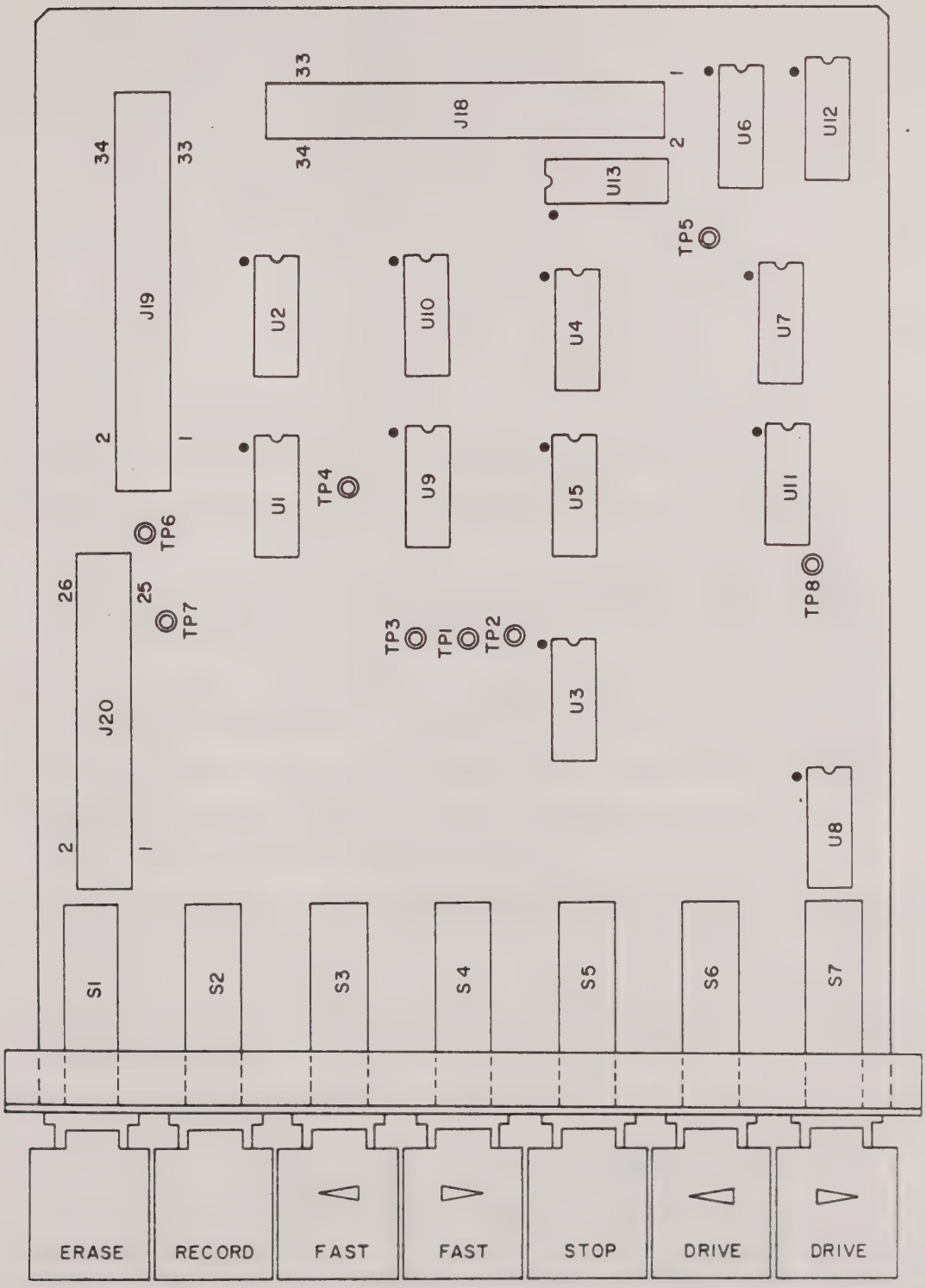

Figure 6-11. Control Logic PWB Components Location Diagram

Test Points

TP1 - Fast Reverse
TP2 - Fast Forward
TP3 - Drive Reverse
TP4 - Drive Forward
TP5 - Command Enable
TP6 - Ground
TP7 - End of Tape
TP8 - Turnaround Idler

g. Repeat step l. for left amplifier.

h. Install tape and select a low speed such as 7-1/2 ips.

i. Press DRIVE FORWARD. Tape should move in the forward direction (to the right).

j. Connect oscilloscope to TP1 on the right reel amplifier PWB. Observe +5 Vdc on the oscilloscope and that the right tension arm is approximately in the horizontal position.

k. Adjust R5 drive potentiometer on the right reel amplifier (see Figure 6-10 for potentiometer location) to obtain +5 Vdc if required.

l. Press DRIVE REVERSE and repeat steps j and k for the left reel amplifier.

m. Connect oscilloscope to TP8 on control logic PWB (see Figure 6-11 for test point location). Verify squarewave output.

n. On oscilloscope, observe a 330 µsec positive pulse at TP1 on the footage counter (see Figure 6-12 for potentiometer location). Adjust R1 located on the right side of the footage counter .

o. Press FAST FORWARD. On the left reel amplifier PWB, adjust potentiometer R13 (see Figure 6-10 for potentiometer location), for symmetry of square wave displayed on scope.

p. Press Stop and REVERSE FAST.

q. Repeat step o and adjust R13 on the right reel amplifier for symmetry.

r. The tape speed will be 180 ips, with transport in Fast Forward.

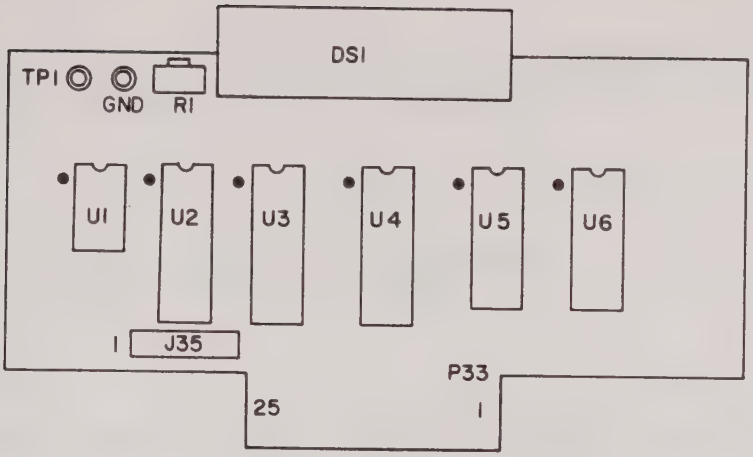

Test Points

TP1 - Pulse Width (for speed adjustment)

GND - Ground

Potentiometer

R1 - Speed Adjustment

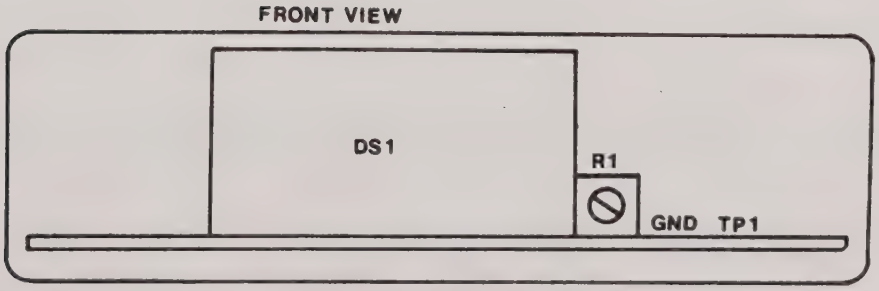

Figure 6-12. Footage Counter PWB Components Location Diagram

6-6. Tape Lock Adjustment

a. Install a calibrated direct module (refer to the Gould Calibrator Module manual in any even channel slot of the Gould 6500. Loosen mounting screw on servo module to allow access to test points and potentiometers.

CAUTION

Be sure the recorder power is OFF when installing or removing a module.

b. Thread tape.

c. Connect Record Reference on the lower back of the recorder to direct module input connector.

d. Connect an AC voltmeter and oscilloscope to the direct module output connector.

NOTE

If the calibrator module is available, the direct module output may also be connected to the calibrator for frequency measurements.

e. Apply power and press DRIVE FORWARD and RECORD. Verify a 50 kHz squarewave at 30 ips.

f. Adjust input level on the direct module to 1 Vrms output.

g. Record approximately 1001 feet of tape.

h. Press STOP.

i. Disconnect the record IN from record reference.

j. Connect Tape Signal IN on lower back of recorder to direct module OUT.

k. Connect oscilloscope to TP2 on servo board (see Figure 6-9 for location).

l. Press TAPE READY and REVERSE DRIVE.

m. Verify a squarewave output.

n. On servo board adjust R11 (see Figure 6-9 for location) symmetry potentiometer so that the displayed squarewave is symmetrical.

o. On servo board, connect oscilloscope to test point TP11 (see Figure 6-9 for location) and verify a rectangular waveform.

p. On the signal module, adjust the reproduce level for .3 Vrms.

q. On the servo board, adjust level potentiometer R8 (see Figure 6-9) so that the rectangular waveform just disappears. The TAPE RDY indicator should not be lit.

r. Readjust the reproduce (output level) potentiometer on the signal module for 1 Vrms.

s. Verify that the TACH SYNC and TAPE RDY indicators are illuminated.

t. Verify tape lock in all speeds by counting down with the ↓ switch. Verify that TACH SYNC and TAPE RDY indicators illuminate at each speed.

u. Verify that the TAPE RDY indicator extinguishes and the TACH SYNC indicator stays illuminated when the recorded signal ends.

v. Stop the recorder.

6-7. Decade Operation Adjustment

a. TURN OFF POWER TO THE RECORDER.

b. Remove the recorder's wraparound cover and its rear cover (see paragraph 8-3).

c. Remove the servo MDA board (paragraph 8-6).

d. On the servo MDA board (Figure 6-9), jumper E1 to E2 and jumper E4 to E5; then reinstall the board.

e. On the reference oscillator board in the pre-amp housing (Figure 6-4), set Switch S1 to DEC position (Figure 6-3).

f. On the switch logic board (Figure 8-4), set switch assembly S8 (Figure 6-1).

The setting of S8 determines the speed at which the recorder will operate when power is first applied. Settings for decade operation are listed below.

Power Up Speed	S8-Sw3	S8-Sw2	S8-Sw1
37.5 ips	CLOSED	CLOSED	CLOSED
3.75 ips	CLOSED	CLOSED	OPEN
.375 ips	CLOSED	OPEN	CLOSED

Set S8 for the decade speed at which you want the recorder to operate when power is first applied.

g. Adjust servo gain.

1. Restore power to the recorder and load it with tape.

2. Set tape speed to 3.75 ips and press forward DRIVE.

3. On the servo MDA board, adjust the 15/3.75 ips gain potentiometer (R34) for servo lock.

h. When adjustment is complete, press STOP, and reinstall the covers.

NOTE

If FM signal modules are installed in the recorder, internal switch S4 on each FM module must be set at WB/DEC position (see Figure 6-18). If a calibration module is installed in the recorder, S2 on its Output Stage PC Assembly (bottom board) must also be set at WB/DEC position.

6-8. Conversion from English to Metric Display

a. TURN OFF POWER TO THE RECORDER.

b. Remove the recorder's front cover, bezel cover, overlay cover, wraparound cover and rear cover (see paragraph 8-3).

c. On the display board (Figures 8-5 and 6-13), set dip switch assemblies S1 and S2 as follows:

Sw1 OPEN Sw2 CLOSED

Sw3 OPEN Sw4 CLOSED

Sw5 OPEN Sw6 CLOSED.

d. Remove the capstan motor assembly (paragraph 8-10) to gain access to the tape counter sensor installed at the rear of the turnaround idler.

e. Change the position of the tape counter sensor; adjust it to its upper position so that it reads the outer segments of the serrated disc.

f. Reinstall the capstan motor.

g. Restore power to the recorder.

h. Adjust the speed potentiometer on the footage counter board.

1. Load tape on the recorder.

2. Set tape drive at the recorder's fastest speed (37.5 or 30 ips).

3. Press forward DRIVE.

4. With an oscilloscope, monitor TP1 on the footage counter board (Figure 6-12).

5. Adjust potentiometer R1 on the footage counter board (Figure 6-12) to obtain a pulse width of 0.11 msec.

6. Press STOP and then FAST forward. Check that the square wave pattern remains symmetrical. If it does not, repeat step 5.

i. When adjustment is complete, press STOP and reinstall the covers. The recorder will now display tape speed in centimeters/second (Table 6-4) and display tape count in decimeters.

6-8A Conversion from Metric to English Display

To convert the display from metric to English, follow the procedure outlined in Paragraph 6-8 above, but set S1 and S2 (step c) with positions 1, 3, and 5 closed, and 2, 4, and 6 open; adjust the counter sensor to its lower position (step e) and adjust potentiometer R1 (step h) for a pulse width of 0.33 msec.

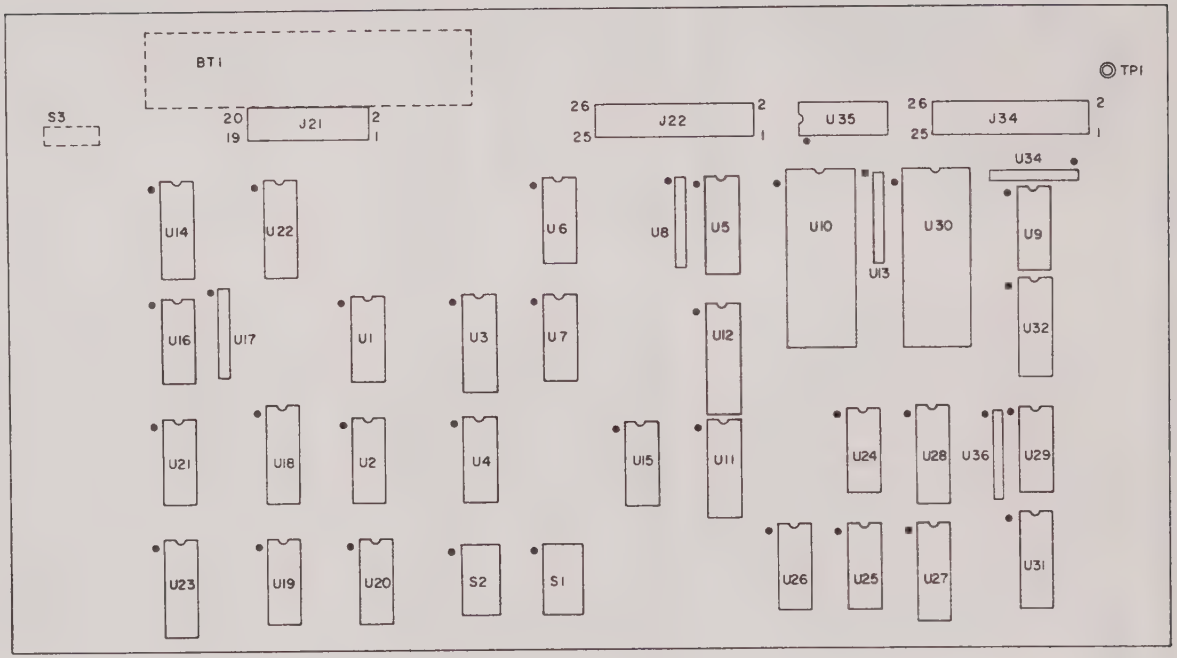

Test Point

TP1 - Ground

Switches

S1 - English/Metric Display Selection Switch
S2 - English/Metric Display Selection Switch
S3 - Battery Switch

Figure 6-13. Display PWB Components Location Diagram

Table 6-4. Tape Speed Display Readings

Binary		Decade	
IPS	CM	IPS	CM
30	76.2	37.5	95.2
15	38.1	3.75	9.52
7-1/2	19	.375	.952
3-3/4	9.5		
1-7/8	4.7		
15/16	2.38		
15/32	1.17		

6-9. Dynamic Skew Adjustment

This procedure requires an oscilloscope and two calibrated direct modules mounted in the recorder. Figure 6-14 is the test setup block diagram. Proceed as follows:

a. Select two adjacent tracks such as four and six. Install a direct module in each channel.

b. Connect each of the record IN connectors on the direct modules to the Record Reference on the lower rear panel of the recorder. (See Figure 3-2 for location.)

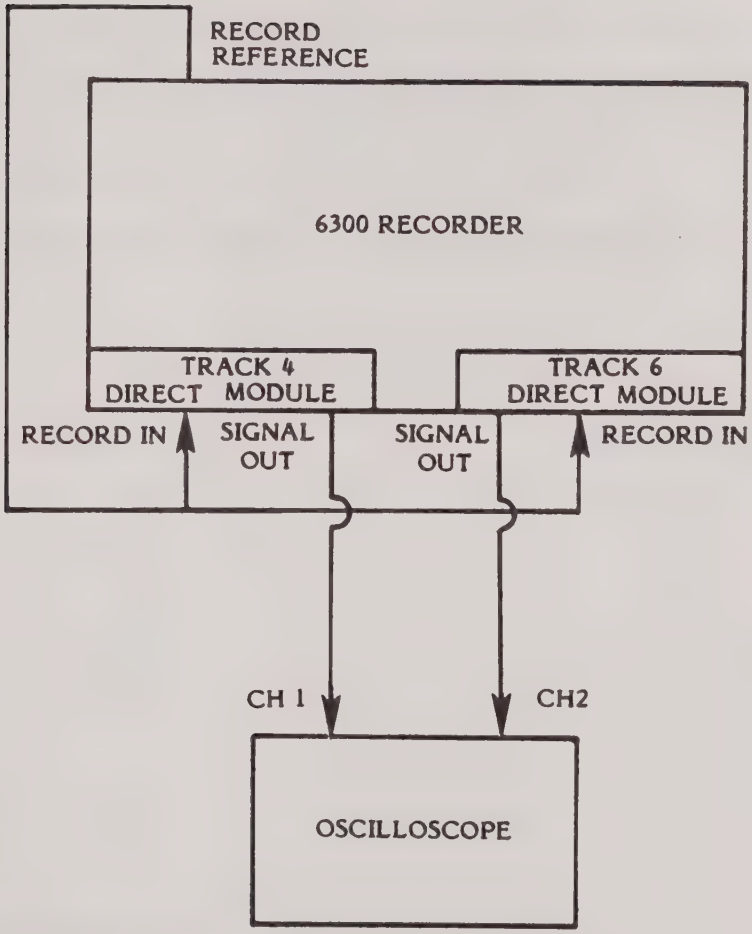

Figure 6-14. Dynamic Skew Adjustment Test Setup Block Diagram

c. Connect one track (in this case Number 4) signal from the track four direct module to output oscilloscope Channel 1. Connect the other track (track 6) signal from the track 6 module to output scope Channel 2.

d. Set oscilloscope to ALT and trigger on Channel 1.

e. Install a degaussed tape on the recorder, apply power and press FORWARD DRIVE and RECORD.

f. Verify that the signal output is present on both scope channels.

g. Adjust oscilloscope Channel 2 display so that the dynamic skew or the side-to-side jitter of the signal can be expressed in μ seconds, peak-to-peak.

h. Take the skew measurement recordings for all speeds.

i. The skew measurements should be within the specifications listed in Table 6-5.

Table 6-5. Dynamic Skew Vs. Speed

	SPEED IN IPS	SKEW IN μSEC P-P
BINARY	30	± 1
	15	± 2
	7.5	± 4
	3.75	± 8
	1.875	± 16
	0.938	± 32
	0.469	± 64
DECADE	37.5	± 1
	3.75	± 8
	.375	± 64

6-10. Time Base Error Adjustment

Connect the recorder and the test equipment as shown in Figures 6-15A and 6-15B the test setup block diagram as called out in the procedure steps d and j. Proceed as follows:

a. Install a degaussed tape onto the recorder.

b. Plug a direct module into an even track position on the recorder.

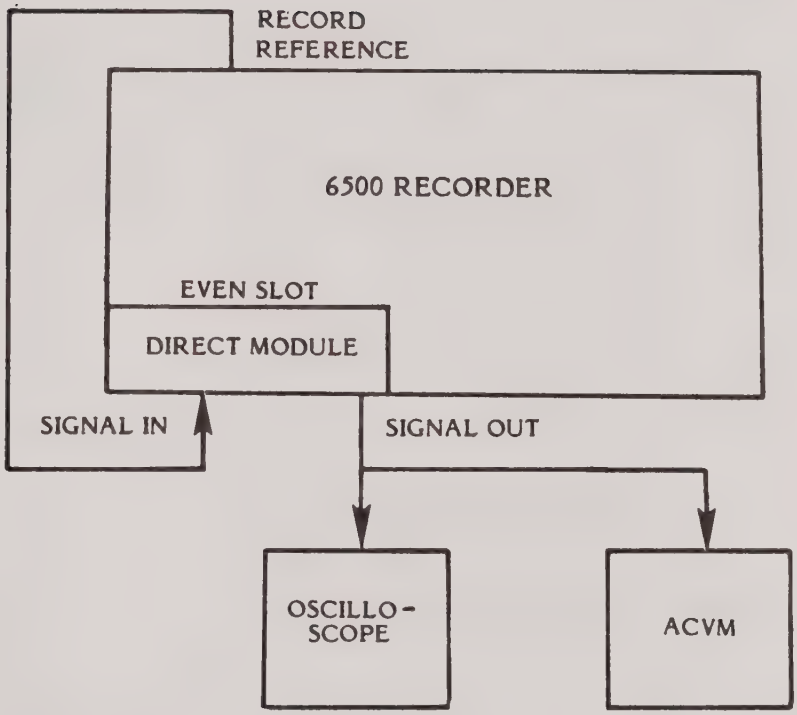

Figure 6-15A. Time Base Error Adjustment Test Setup Block Diagram

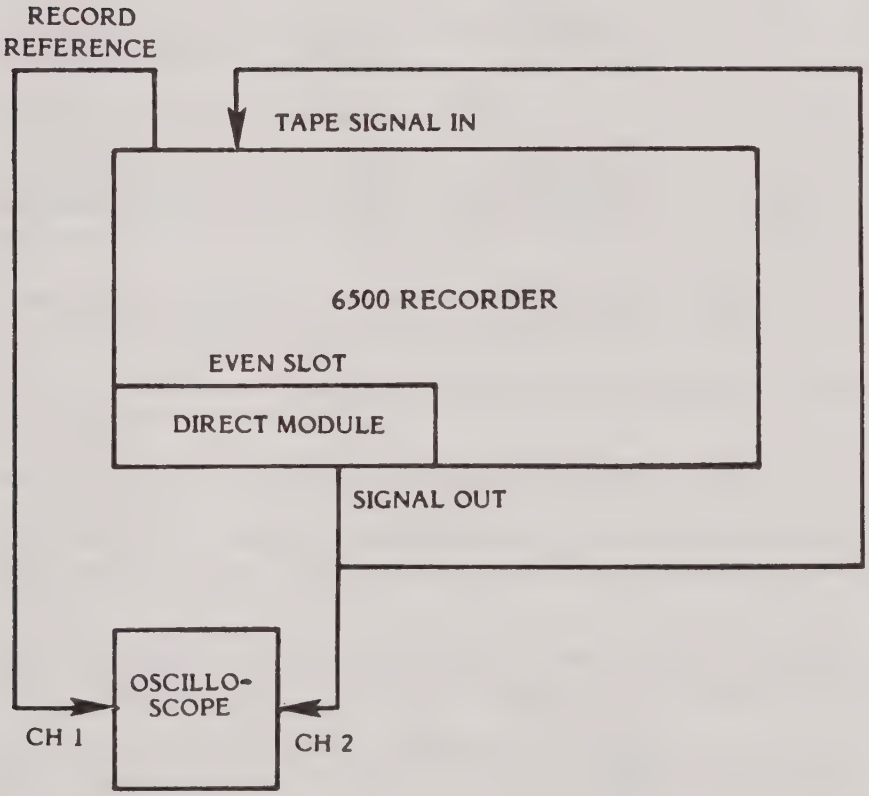

Figure 6-15B. Time Base Error Adjustment Test Setup Block Diagram

c. Connect the direct module signal IN connector to the RECORD REFERENCE connector located on the lower back panel of the recorder, (Figure 3-2).

d. Connect the AC voltmeter (ACVM) and oscilloscope to the signal OUT connector of the direct module. (See Figure 6-15A, Test Setup Block Diagram.)

e. Apply power to the recorder.

f. Press DRIVE FORWARD ▷ and RECORD. Verify the presence of a 50 kHz square wave output signal.

g. Record 200 feet of signal and then press STOP.

h. Disconnect the cable between the direct module RECORD IN and the recorder's RECORD REFERENCE connector.

i. Disconnect oscilloscope and the ACVM.

j. Connect the signal OUT connector of the direct module to the TAPE SIGNAL IN connector on the back of the recorder. (See Figure 6-15B, Test Setup Block Diagram.)

k. Connect oscilloscope Channel 1 to the RECORD REFERENCE connector on the lower panel at the rear of the recorder, (Figure 3-2).

l. Connect oscilloscope Channel 2 to the signal OUT connector on the direct module, (Figure 6-15B).

m. On the oscilloscope, select ALT display and trigger on Channel 1.

n. Press TAPE RDY and REVERSE DRIVE ◁. Verify that the TAPE RDY indicator lamp lights. This indicates that the servo locks onto the signal from the tape.

o. On the oscilloscope, display the Channel 2 output so that the time-displacement-error or the side-to-side jitter of the signal can be expressed in μsec.

p. Take Time Base Error (TBE) readings for all speeds and verify that they comply with the specifications in Table 6-6. Log all readings in the DRIVE FORWARD ▷ mode.

q. If not within tolerance fine tune the appropriate speed potentiometer on the servo PWB (refer to Figure 6-9 for potentiometer locations).

6-11. Flutter Adjustment

Connect the recorder and test equipment as shown in Figure 6-16 the test setup block diagram. Proceed as follows:

a. Install a degaussed tape onto the recorder.

b. Install a direct module in the recorder (any available direct channel).

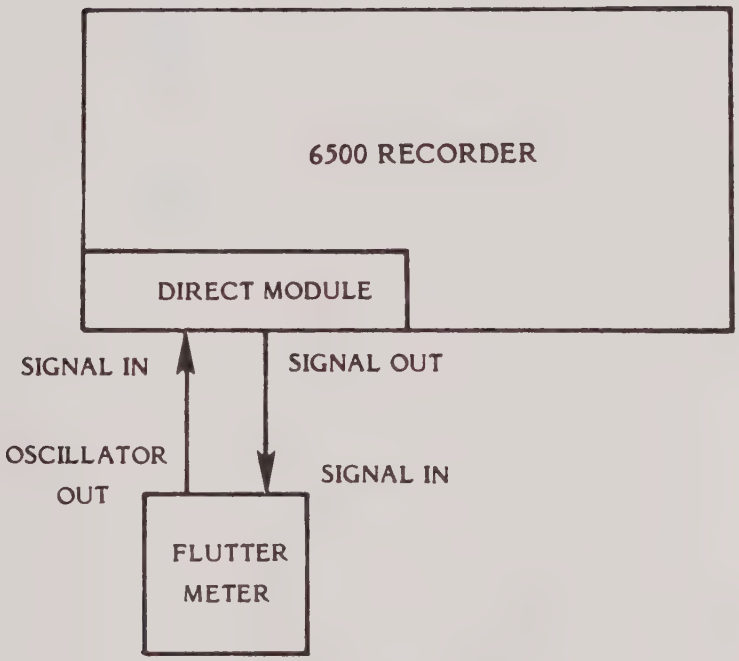

Figure 6-16. Flutter Adjustment Test Setup Block Diagram

c. Connect the flutter meter connector OSCILLATOR OUT to the direct module SIGNAL IN connector.

Table 6-6. Time Base Error

	SPEED IN IPS	ERROR IN μSEC
BINARY	30	± 1
	15	± 1.5
	7.5	± 3
	3.75	± 4
	1.875	± 8
	0.938	± 12
	0.469	± 24
DECADE	37.5	± 1
	3.75	± 4
	.375	± 24

d. Connect the flutter meter SIGNAL IN connector to the direct module SIGNAL OUT connector.

e. Set flutter meter controls as follows:

Switch	Position
Drift BW	Fast
Flutter %	1
Peak Time	2 Sigma (2)
Meter Select	Demod

f. Test the frequency and bandwidth and compare to Table 6-7.

g. Apply power to the recorder.

h. Press DRIVE FORWARD ▷ and RECORD.

i. Take flutter readings and compare to Table 6-7, Flutter Adjustments.

Table 6-7. Flutter Adjustment

Flutter:	Speed	Carrier Frequency	Bandwidth	% Flutter
BINARY	30	50 kHz	.2 Hz - 5 kHz	0.25
	15	25 kHz	.2 Hz - 2.5 kHz	0.3
	7-1/2	12.5 kHz	.2 Hz - 1.25 kHz	0.3
	3.75	6.25 kHz	.2 Hz - 625 Hz	0.3
	1-7/8	3.12 kHz	.2 Hz - 312 Hz	0.4
	15/16	1.56 kHz	.2 Hz - 156 Hz	0.5
	15/32	1.56 kHz	.2 Hz - 78 Hz	0.8
DECADE	37.5	67.5 kHz	.2 Hz - 12.5 Hz	0.23
	3.75	6.75 kHz	.2 Hz - 1.25 Hz	0.3
	.375	.675 kHz	.2 Hz - .125 Hz	0.08

6-12. Remote Control Logic Operation Test

This procedure is to be accomplished after the control logic operation test in paragraph 6-2 is performed and any recorder malfunctions have been corrected. This procedure is to be used as follows:

a. To verify the proper operation of a new Remote Control Unit.

b. To check the Remote Control Unit operation if specified by the Diagnostic Troubleshooting procedures in Section VII.

c. To verify the Remote Control Unit's operation after it has been installed and before the system (Recorder and Remote Control Unit) is to begin its operational function, proceed as follows:

1. Connect the Remote Control Unit to the recorder at the two rear panel connectors.

2. Refer to Table 6-3, Control Logic Operation Test, and test the remote control functions by comparing commands and indications with those of the recorder.

NOTE

On the Remote Control Unit, the SPEED LOCK indicator is comparable to the TACH SYNC indicator on the recorder. The SPEED LOCK indicator lamps light when the capstan servo is locked.

3. Select speeds from 30 to 15/32 ips on the recorder and verify that the corresponding speed indicator lamps light on the Remote Control Unit.

4. Select decade speed on the recorder by setting S1 on the reference oscillator PWB to DEC (See figure 6-2 and 6-4 for location). Test the three decade speeds and their indicators on the remote control unit.

d. For Shuttle and Serpentine Modes refer to the Remote Control Unit Manual and verify opertion of these two modes.

6-13. FM Module Calibration (Refer to the Calibrator Module Manual).

6-14. Direct Module Calibration (Refer to the Calibrator Module Manual).

6-15. Audio Module Calibration (Refer to the Calibrator Module Manual).

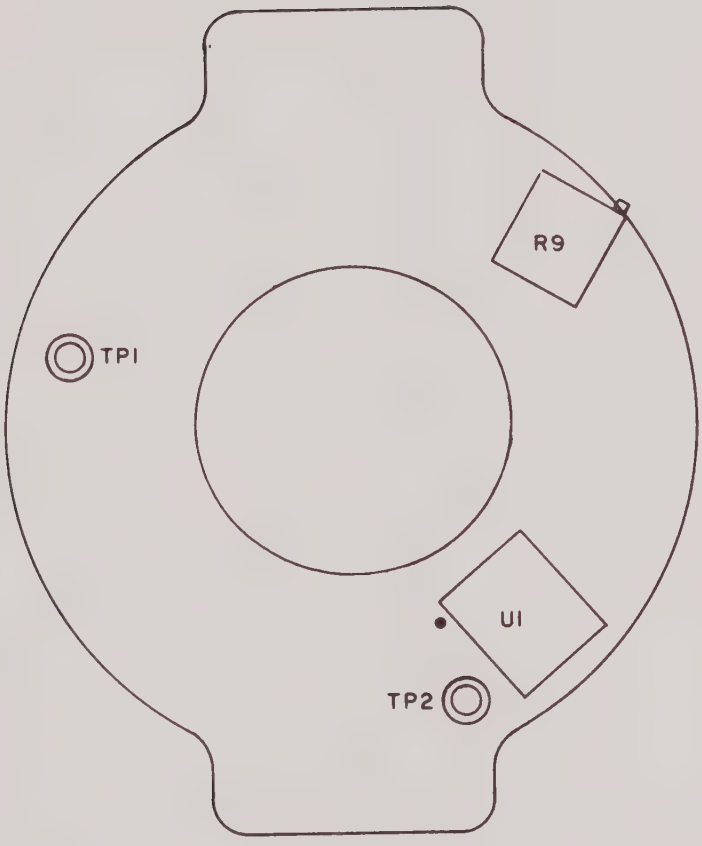

Figure 6-17. Tachometer Preamplifier PWB Components Location Diagram

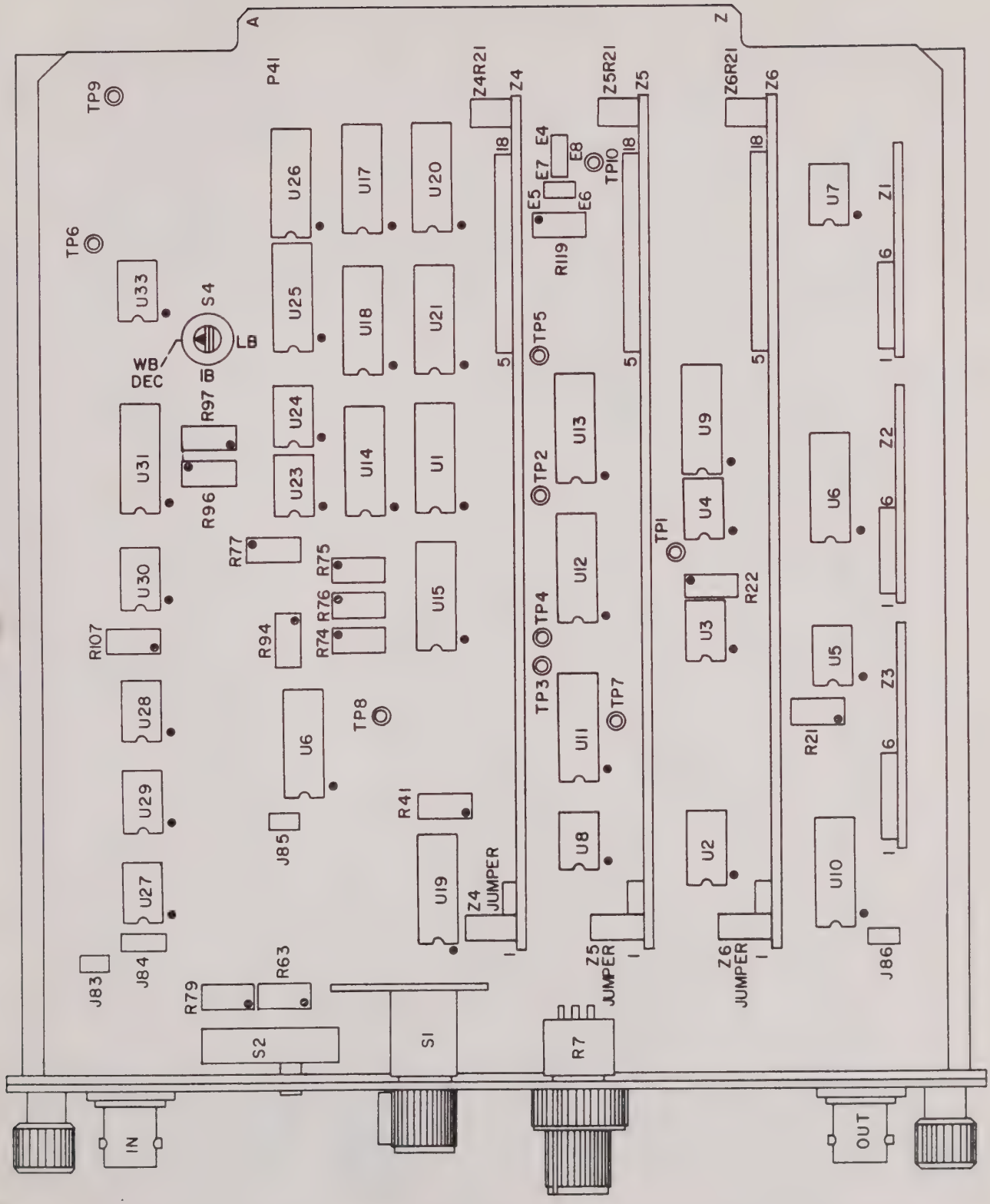

Figure 6-18. FM Record/Reproduce Module PWB Components Location Diagram

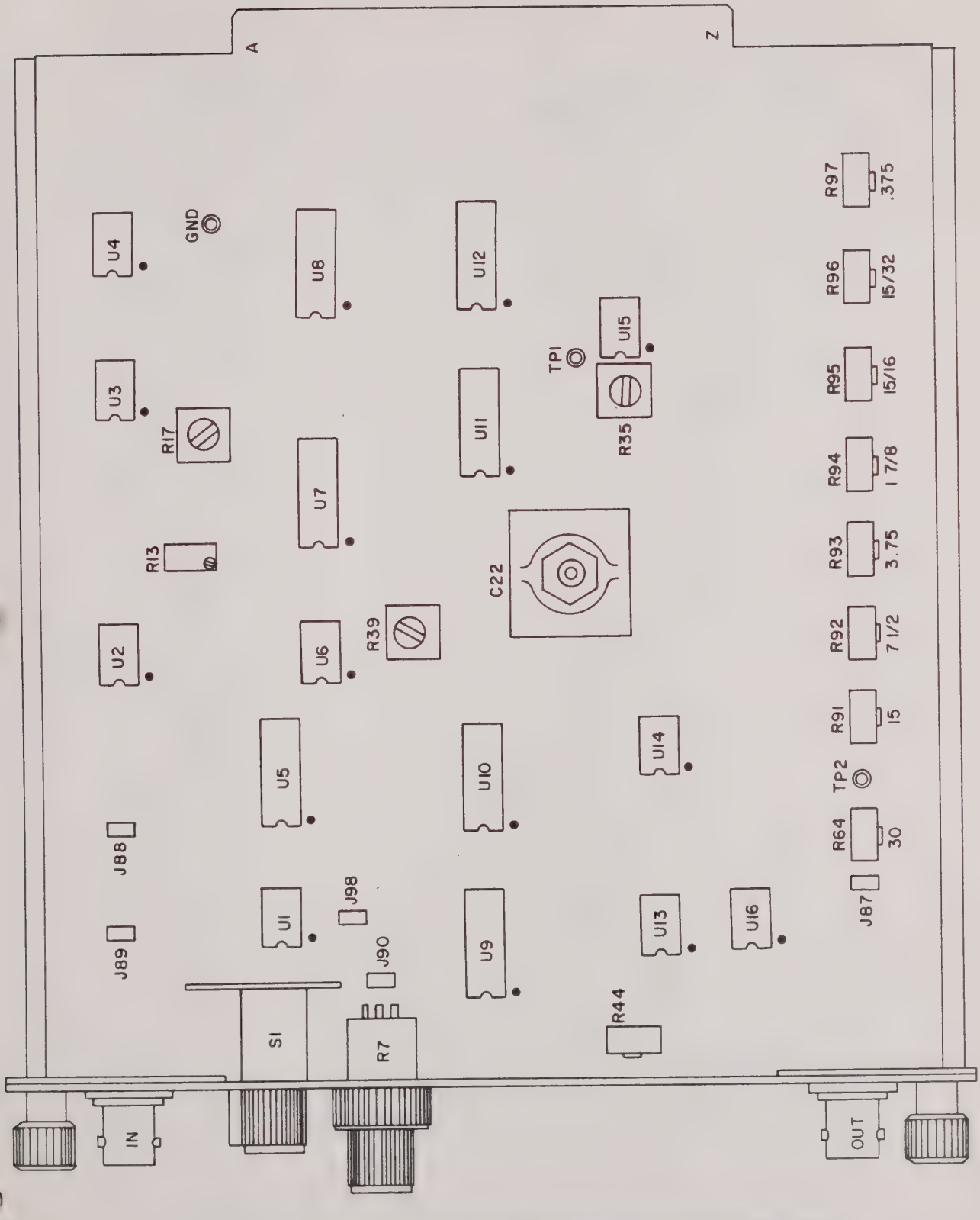

Figure 6-19. Direct Module PWB Components Location Diagram

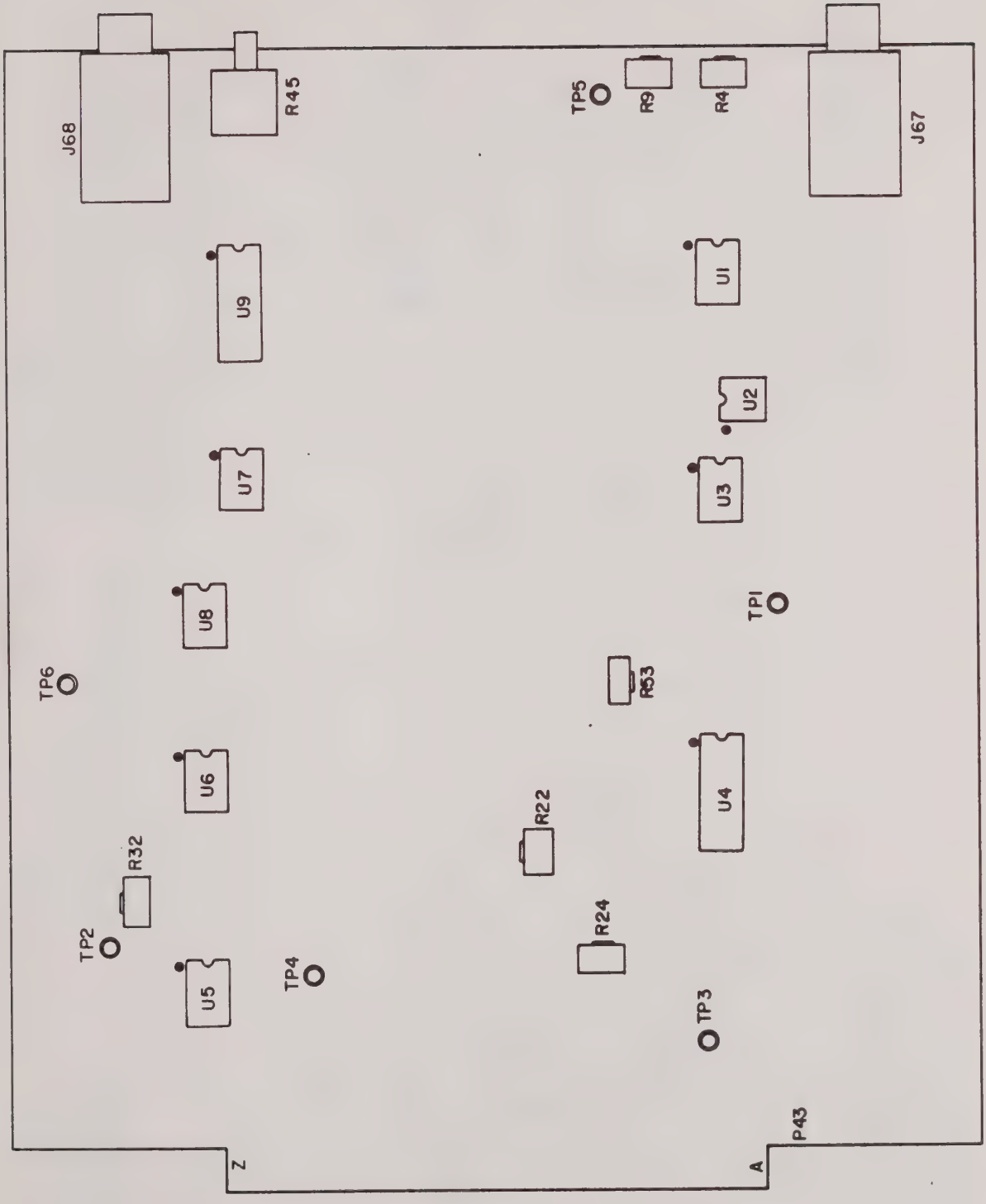

Figure 6-20. Audio Module PWB Components Location Diagram

Test Points

TP1 - Carrier
TP2 - Ground

Switches

S1 - Signal Output Switch
S2 - Bandwidth Configuration Switch
S3 - FM Calibration Switch

Connector Jacks

E1, E2, E3 - to Frequency Adjustment Control
E4, E5, E6 - to Output Level Adjustment Control
E7, E8 - to OUT BNC Cable Connector
E9 - Not used
E10, E11 - to Input Attenuator PC Board

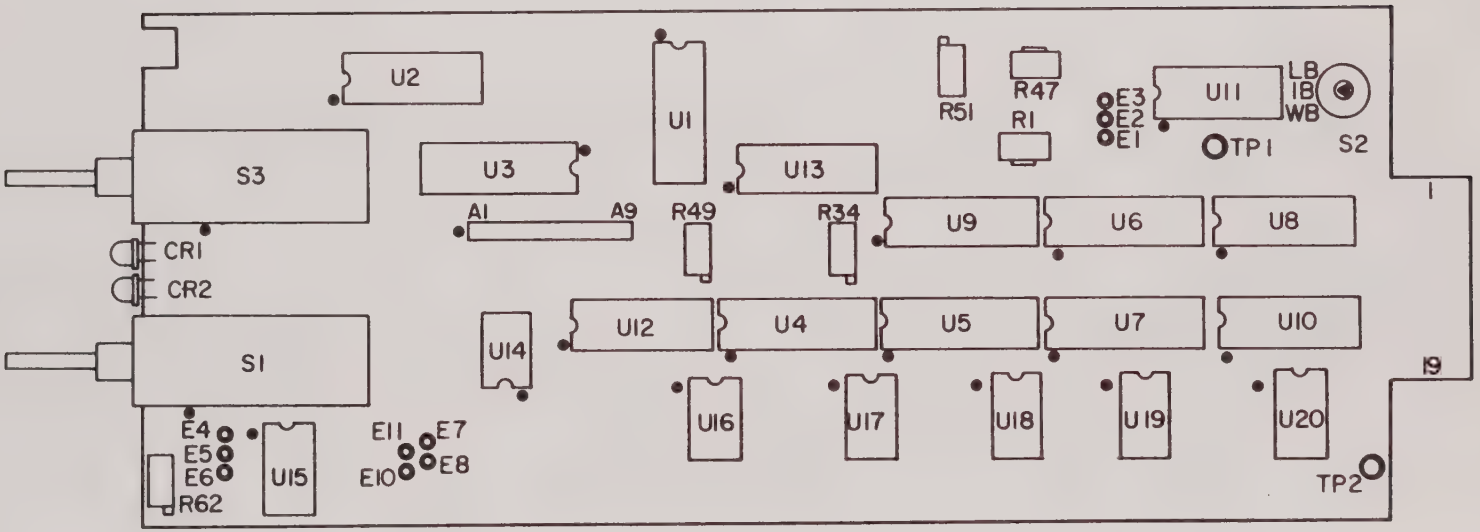

Figure 6-21. Output Stage, Calibrator PWB Components Location Diagram

Potentiometers

R1 - Low Frequency Stop
R34 - Symmetry Adjustment
R47 - High Frequency Stop
R49 - Sine Wave Distortion
R51 - Sine Wave Distortion
R62 - DC Offset

LED Indicators

CR1 - FM Calibration Indicator (yellow)
CR2 - Signal Output Indicator (green)

Test Points

TP1 - Notch Filter Output
TP2 - A/D In
TP3 - Ground

Potentiometers

R3 - 15 kHz Null Adjustment
R10 - DC Offset
R16 - 15 kHz Null Adjustment
R18 - 0.0 dB Level Adjustment
R21 - AC Gain Adjustment
R23 - Filter Gain Adjustment
R27 - dB Calibration Adjustment
R31 - AC Offset
R36 - Low Level dB Calibration Adjustment

Switches

S1 - Frequency Multiplier Switch
S2 - Display Switch

Connector

E1, E2 - To Input Attenuator PC Board

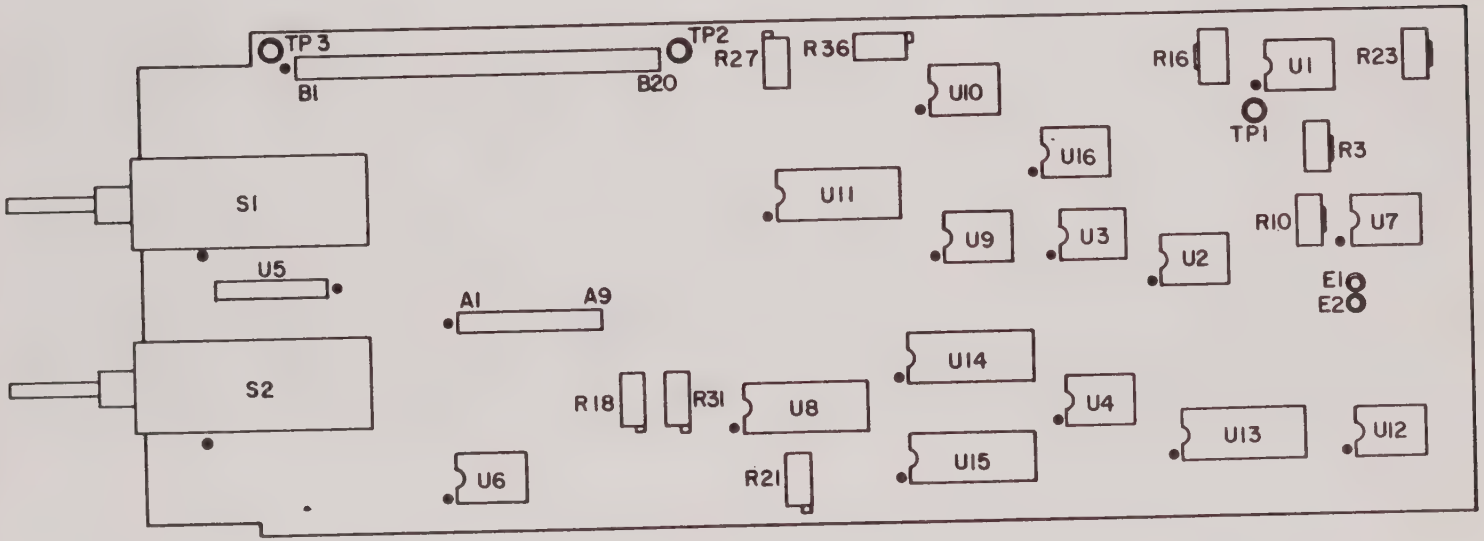

Figure 6-22. Linear Input, Calibrator PWB Components Location Diagram

Potentiometer

R23 - Reference Voltage

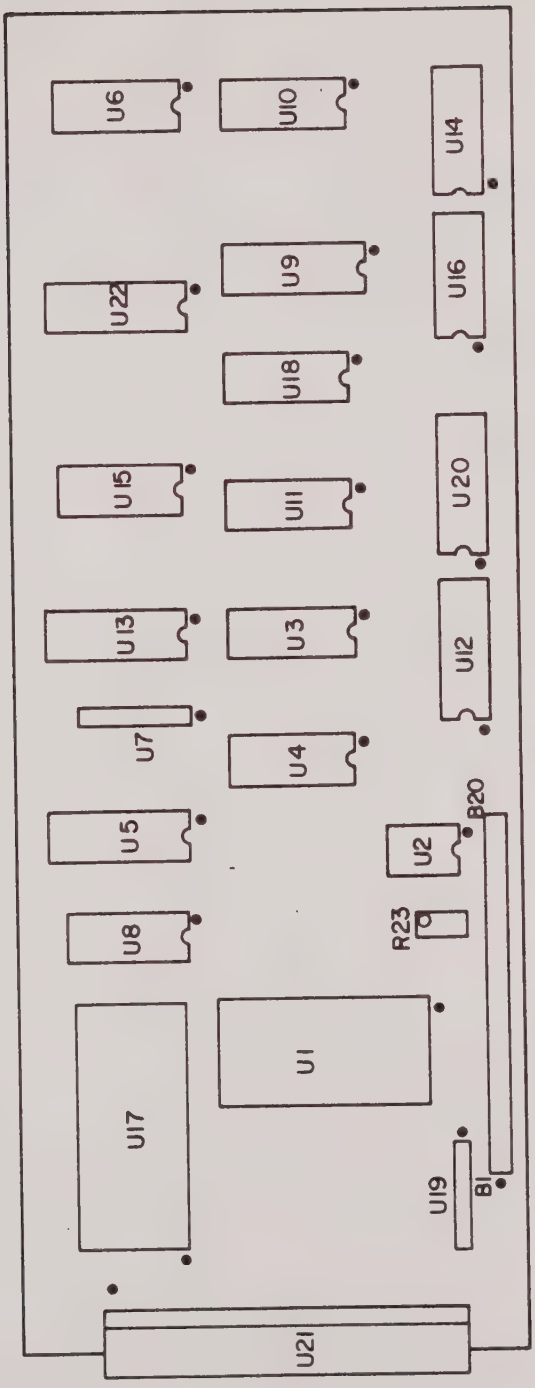

Figure 6-23. Digital Calibrator PWB Components Location Diagram

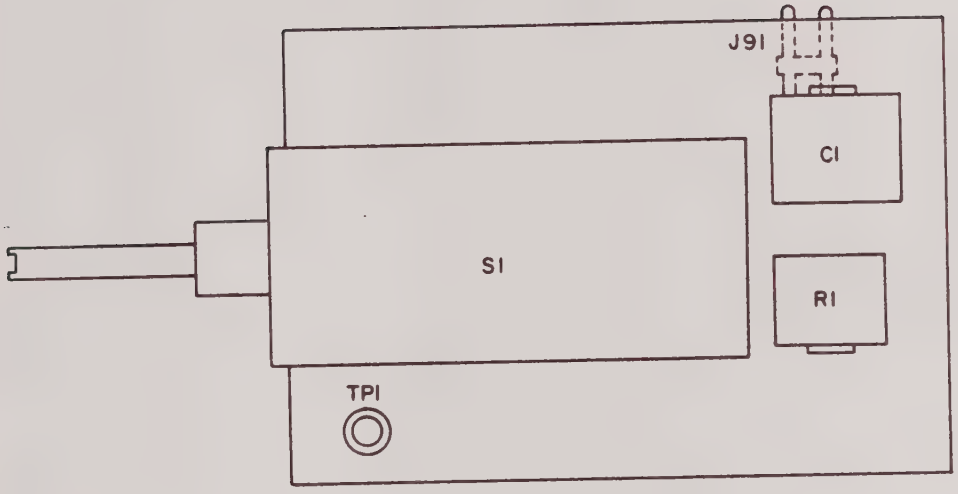

Figure 6-24. Calibrator Attenuator PWB Components Location Diagram

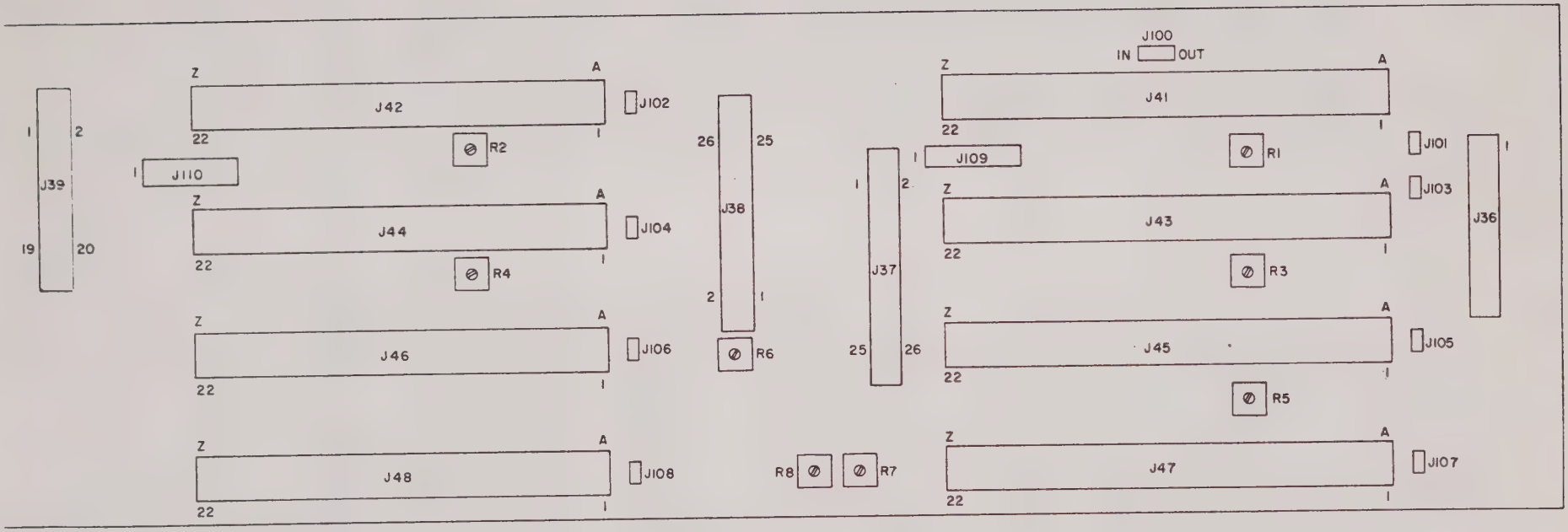

Record Current Adjustment Potentiometer

R1 - Track 1
R2 - Track 2
R3 - Track 3
R4 - Track 4
R5 - Track 5
R6 - Track 6
R7 - Track 7
R8 - Track 8

J100 - Flutter Compensation Jumper
IN - 8 Track Interconnection
OUT - 4 Track Interconnection

Figure 6-25. Card Cage Interconnect PWB Components Location Diagram

SECTION VII.

DIAGNOSTICS AND TROUBLESHOOTING

7-1. INTRODUCTION

The diagnostic and troubleshooting procedures provided in this section will enable the technician to recognize and troubleshoot performance problems for the Gould 6500 down to the module level. These procedures are only for the basic operating circuitry of the recorder and not the optional plug-in modules. Procedures for calibration and adjustment for the plug-in modules with the use of the calibrator module are provided in the Gould Calibrator Module Manual.

7-2. LOCALIZING RECORDER/REPRODUCER SYSTEM PROBLEMS

In order to localize any trouble with the operation of the Gould 6500, two criteria have to be established. First, determine whether the problem affects all channels or just one channel. Second, does the problem result in deteriorated performance or no performance at all.

If a malfunction is confined to only one channel, the circuitry of the appropriate module should be checked. If all channels are affected, the problem is traceable to either the bias or ± 10 Vdc record voltage.

Bias Check:	Using an oscilloscope, check Bias Driver PWB TP1 (see Figure 6-4 and 6-8 for location) for a 20V p-p sine wave at 1 MHz.
± 10 Vdc Record Voltage Check:	Verify ± 10 Vdc record lights located on the rear of the Power Supply are illuminated when power is applied and record switch is depressed and lights.

If the conditions tested or verified for above do not occur, exchange data modules and verify correct performance. (See Gould Calibrator Module Manual for trouble-shooting the data modules.) On the recorder, exchange the head preamplifier PWBs in the rear card cage. If a particular PWB does not pass signal, the preamplifier board is faulty and must be replaced. If the trouble lies in an FM module, verify that the input attenuator is set at 2.5V p-p and also verify that the unipolar switch is in the OFF position. (Refer to the Gould Calibrator Module Manual.)

Once the general area of malfunction is determined, refer to paragraph 7-3 for more detailed diagnostic and troubleshooting procedures.

7-3. DIAGNOSTIC AND TROUBLESHOOTING PROCEDURES

This information provides diagnosis and troubleshooting of specific recognizable faults that may be determined by observation during the operation of the Gould 6500. The procedures are organized by module so that faults occurring in specific areas of the recorder can be dealt with in a logical and expeditious manner.

Use

To use the procedures, refer to the faults list, Table 7-1, below. When the specific fault description is found, refer to the procedures as directed.

Table 7-1. Faults List

Description/Symptom	Refer To
No Power to Equipment	Page 7-2, paragraph 7-3A
No Function Selection	Page 7-3, paragraph 7-3B
Function Selected, Command Not Released	Page 7-4, paragraph 7-3C
Command Released Before Tape Stops	Page 7-5, paragraph 7-3D
Incorrect Operation of Capstan Motor	Page 7-7, paragraph 7-3E
Fast Wind Modes Run Uncontrolled	Page 7-7, paragraph 7-3F

7-3A. No Power to Equipment

a. Check for power at wall outlet making sure power cord is properly installed and properly attached to the recorder; repair or replace if defective.

b. Check fuse on power supply; replace if defective.

c. Be sure power switch is properly actuated; press Power switch to ON, POWER ON lamps will light.

d. Check power supply voltage indicators. All ±10V Record LEDs will be lit. The ± 10V Record LEDs light when the recorder is in RECORD.

e. Press Record switch to RECORD. Verify that all power supply indicators are lit. If any power indicators are not lit, this indicates a possible short circuit. Turn off the recorder immediately and use the following procedure to check the power supply.

f. Remove and replace power supply (see Section VIII, Assembly/Disassembly). Repeat steps c, d, and e and verify that all indicators light. If indicators do not light there is a short in the recorder.

7-3B. No Function Selection

a. Switches do not light when power is applied to the recorder and switches are pressed to activate their specific modes. Check voltage indicator lamps on the back of the power supply. All lamps should be lit except for the ± 10V Record lamps.

NOTE

If the RECORD mode is selected, the +10V record lamps shall light.

If power supply lamps are not lit, refer to 7-3A, Step f and subsequent steps.

b. If the power lamp does not illuminate but the STOP lamp does, check the power lamp bulb. When functions are selected and the recorder functions, but lamps do not light, check all switch lamp bulbs. Replace if defective.

7-3C. Function Selected, Command Not Released

a. Modes do not activate when switches are activated and the tape is not in motion. Refer to paragraph 6-2, Control Logic Operation Test.

b. If the control logic operation test fails, note which switch indicator and mode does not operate.

c. Remove bezel from the switch assemblies, check the switch connections. Make sure that the three connectors to the PWBs are properly seated in their respective slots.

d. Pushbutton lamps light, the selected function is not activated and the tape does not move.

e. Check Fast Forward and Rewind. Verify that the tape is in motion.

f. Check the pinch rollers and verify that they energize in the drive modes.

g. If the pinch rollers energize, check for reference signal at TP3 on the Capstan Servo PWB (test point locations are in Section VI). If no signal is present, change the reference oscillator board in the rear card cage. (See Figure 6-4 for location).

h. When switches are activated, the recorder does not perform in the desired mode. Check operation procedures. If the recorder still fails to function, check switch connections and control logic PWB connections.

1. With a voltmeter on the Control Logic PWB, check for +10V ± 0.5V on J19, pin 5 and pin 6 (pins 1 and 2 are ground). Check for +12V ± 0.5mV on J19 pins 3 and 4. Check for +10V ± 100mV on J18, pin 1 (pins 31 and 32 are ground). Check for +12V ± 0.5V on J20, pins 14 and 16.

2. Connect oscilloscope to TP6 GND on the Control Logic PWB (See Figure 6-11 for location), and probe test points 1 through 5 and test point 7 and 8 of the presence of the appropriate logic levels when switches are depressed. Refer to Table 7-2 for appro-priate control logic levels.

Table 7-2. Control Logic

Switch	TP	Logic Level
FAST REV	1	Hi
FAST FWD	2	Hi
DRIVE REV	3	Hi
DRIVE FWD	4	Hi
COMMAND ENABLE	5	Hi until tape is proven stopped, then it is Lo
GND	6	--
EOT (With No Tape in Recorder)	7	Lo
TURNAROUND IDLER	8	Hi or Lo depending on footage measurement.

If any voltage or logic state is not present at the test points described above, replace the control logic PWB.

7-3D. Transport Mechanical Check

a. Check the operating procedures for proper switching, power supply, switch assembly and control logic for malfunctions refer to paragraphs 7-3A, B, and C of this procedure.

b. Check tape path and EOT sensor and tape tension sensor. Inspect all idlers in the tape path for free and smooth rotation. Verify that the pinch rollers and turnaround idler are free. Make sure that the pinch rollers clear the capstan shaft in the released position. If any tape path components are defective, replace them (refer to Section VIII, Assembly/Disassembly).

c. Check the brake torque using a torque wrench. Measure the brake torque on both reel motor hubs. Verify that the torque is 18 ± 1 oz. If the torque is not within tolerance, refer to Section V, Preventive Maintenance, paragraph 5-7 for adjustment.

d. Check the positions of the jumper connections. The Takeup Reel Amplifier Assembly 300095-02 the jumper should be from E1 to E2 (See Figure 6-10 for location). On the Supply Reel Amplifier Assembly 300095-01, the jumper should be from E2 to E3.

e. Verify that S1 and S2 on the display board (See Figure 6-13 for location) are set for binary operation as follows:

   Positions 1, 3, and 5 closed
   Positions 2, 4, and 6 open

f. Set S1 on the reference oscillator in the preamp housing to Bin. (See Figure 6-4 for location).

g. Apply power to the recorder, see paragraph 7-3A for power supply check. Verify that power and stop switch indicator lamps are lit.

h. Press the DSP (display) switch and verify that the DSP lamp lights.

i. Verify that the display correctly shows the speed for which S8 (Power Up Speed Switch) on the logic board is set as follows. The setting of S8 determines the speed at which the recorder comes up when power is first applied.

Speed	P2 TKS 4-3	P1 TKS 5-2	P0 TKS 6-1	0 indicates closed
30	0	0	0	
15	0	0	1	
7.5	0	1	0	
3.75	0	1	1	
1.875	1	0	0	
0.938	1	0	1	
0.469	1	1	0	
37.5	0	0	0	
3.75	0	0	1	
.375	0	1	0	

NOTE

The display gives the lower fractional speeds in their decimal equivalents.

j. With rubber bands, secure the tension idler arms all the way out of their released position.

k. Press FORWARD DRIVE ▷. Verify that the pinch rollers energize, the capstan shaft turns in the counterclockwise direction, the STOP indicator lamp is OFF and the DRIVE indicator lamp lights.

l. Change the tape speed up and down and verify that the capstan speed changes.

m. Change the drive direction and verify that the capstan now turns in the clockwise direction. Verify that the FORWARD DRIVE ▷ indicator is OFF and the REVERSE DRIVE ◁ indicator lamp is lit.

n. Press STOP.

7-3E. Incorrect Operation of Capstan Motor

a. Capstan motor malfunctions when recorder is placed in any drive mode as follows:

1. Does not run

2. Turns in wrong direction

3. Runs out of control

4. Capstan operates but tape is not in motion

b. Check for reference squarewave signal on the capstan servo board test point, TP3 (See Figure 6-9 for location). If no signal is present, check pin H of the reference oscillator preamplifier PWB in the rear card cage.

c. Install a new Control Logic Board.

d. Check test point, TP1, on the Capstan Servo/MDA PWB (See Figure 6-9 for location). If no tach signal is present when capstan turns, replace the capstan motor.

e. Check pinch roller operation and verify +12V is present at J27, pin 3, on the Servo/MDA PWB.

7-3F. Fast Wind Modes Run Uncontrolled

a. Check the Control Logic PWB test point, TP8, for speed line squarewave signal.

b. If there is no squarewave signal at TP8 connect oscillocope to TP1 on the counter board.

c. Operate turnaround idler manually and verify a squarewave output.

SECTION VIII.

ASSEMBLY/DISASSEMBLY WITH PARTS LIST

8-1. INTRODUCTION

The procedures for assembly and disassembly of the Gould 6500 contained in this section provide instructions for removal and replacement of major subassemblies. These procedures describe assembly and disassembly as required for field source purposes. The accompanying parts list provided at the back of this section contains the information necessary for ordering replacement parts to the field service level and any accessories for operation or the improvement of the operation of the 6500 recorder.

WARNING

Before disassembly of the recorder or removal of any protective cover, turn off the recorder and disconnect the power cable from the power source.

NOTE

Remove tape and reels and all auxilliary cables and modules. Modules removal instructions are in Section 2 paragraph 6.

8-2. SCOPE

The procedures provided in this paragraph are descriptions of disassembly procedures with figures shown as needed for easy location and recognition of assemblies and parts. Assembly procedures are not provided unless there are special considerations in the re-assembly of any portion of the recorder. Assembly is to be performed in the reverse sequence of the disassembly description herein.

NOTE

All references to left and right in these procedures are with respect to the technician's point of view.

8-3. REMOVAL OF PROTECTIVE COVERS

a. Removal of Plastic Protective Cover

1. Lift protective cover and locate hinge pins and their mounting holes (refer to Figure 8-2)..

2. With a pointed object, depress the right side hinge pin until it is free of its mounting hole.

3. Carefully lift the protective cover until the right side hinge pin is free of the recorder.

4. Slide the protective cover to the right until the left side hinge pin is free of the recorder.

5. Lift the cover free from the recorder, the hinge tension springs and shaft will come free of their brackets on the recorder.

6. Store the protective plastic cover upright. **Do not** lay it on a bench or the plastic will become scratched or marred.

b. Removal of Bezel Cover

1. Remove four (4) Phillips screws from the switch plate (Note orientation of rubber grommets).

2. Pull switch plate free of recorder and store upright to prevent scratching or bending.

NOTE

During assembly Rubber Grommets should be on top.

c. Removal of the Overlay Cover

NOTE

It is not necessary to remove the septum in order to remove the overlay.

1. Remove the seven (7) Phillips mounting screws from the face of the recorder.

2. Carefully pull the precision plate cover free of the recorder and store in an upright position to prevent scratching.

d. Removal of Head Cover (Refer to Figure 8-1.)

1. Using a Phillips head screwdriver, remove the two (2) head cover screws located on each side of the cover.

2. Carefully pull the head cover straight out from the recorder being careful not to break the guide pins inside at the top of the cover.

CAUTION

Do not contact heads with screwdriver or any object which can cause scratches. When storing heads, do not lay them on the head surfaces or in a position which allows the heads to come in contact with another surface.

3. Remove the septum screw.

4. Pull the septum straight out from the face of the recorder and remove.

e. Removal of the Wraparound Cover

1. Remove six (6) Phillips head screws from the right and left bottom edge of the wraparound cover at the side of the recorder.

2. Remove (4 on the left, 4 on the right) Phillips head screws from the rear side edges of the wraparound cover, next to the Power Supply and the Servo/MDA module.

3. Remove eight (8) large Phillips head screws from each side of the front of the recorder; four (4) from each side.

4. Grasp the wraparound cover at the lower edges and pull the cover free from the recorder at the bottom.

5. Slide the wraparound cover toward the rear of the recorder and carefully pull it up and away from the recorder chassis.

6. Store the wraparound cover on its side edge to prevent warping and scratches to the flat finished sides.

f. Removal of the Rear Cover

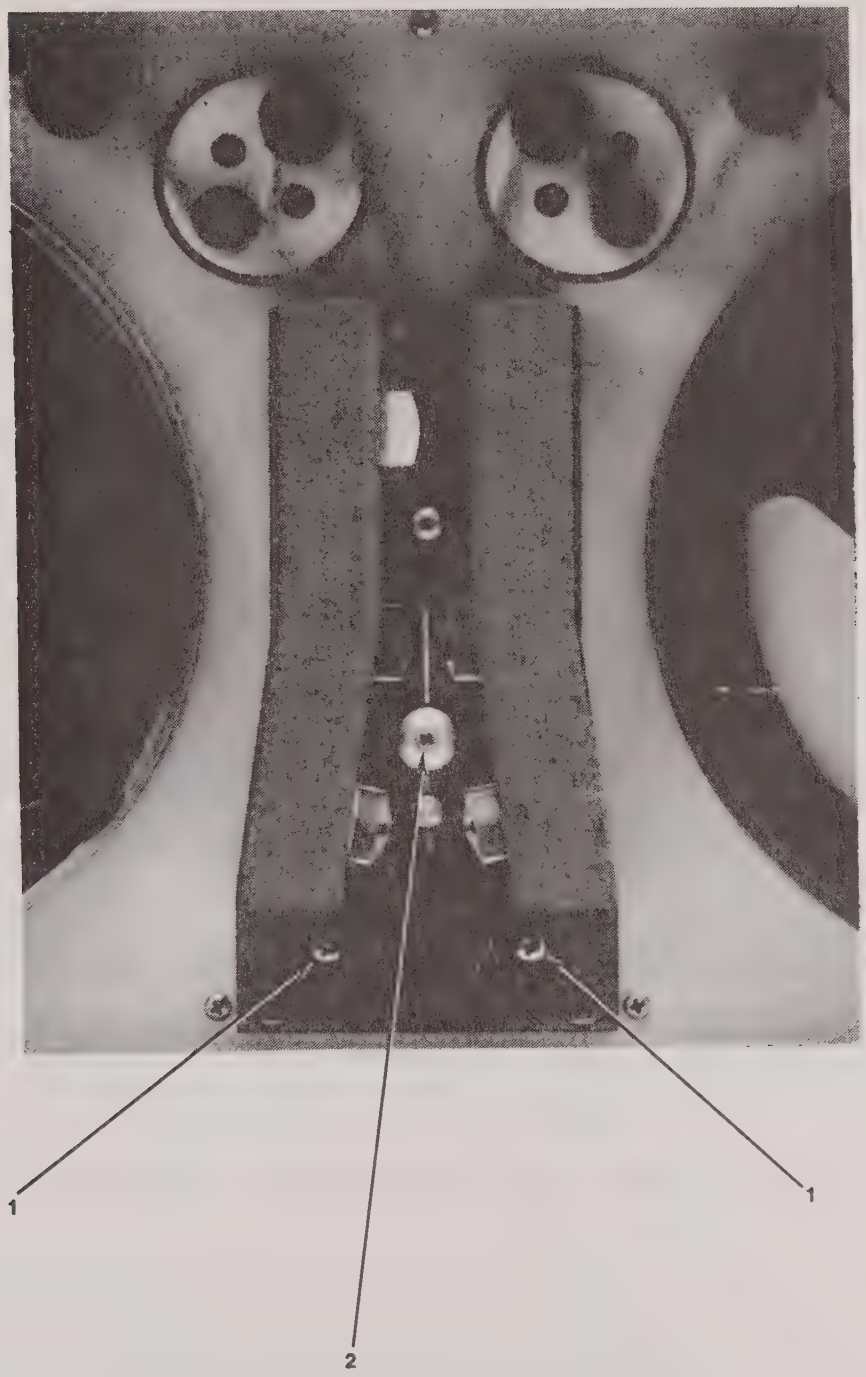

Legend: 1. Septum Cover Screws (2) 2. Septum Screw (1)

Figure 8-1. Septum and Head Cover Attaching Screw Locations

NOTE

It is not necessary to remove the Power Supply or the Servo/MDA module before removing the rear cover. The rear cover also has two configurations, -01 without a special BNC panel and -02 with a special BNC panel. Also, to remove rear panel sprips on right and left side (part of wraparound cover) wraparound cover must be removed. Refer to paragraph 8-3.e.

1. For recorder without special BNC panel, remove rear panel by removing six screws from rear panel edges.

2. For a recorder with a special BNC panel (option).

   a. Remove Rear three (3) Cover Screws from the rear Cover panel. Remove Rear Cover.

   b. Remove four (4) screws from the BNC panel. Remove the BNC panel being careful not to break BNC wiring.

   c. Tag BNC wires unsolder and remove panel.

8-4. REMOVAL OF HEADS AND TAPE DRIVE COMPONENTS (Refer to Figure 8-2.)

a. Remove the rear panel, wraparound cover, overlay cover, and head cover. Refer to paragraph 8-3.

b. Head Assembly

   1. Carefully pull right and left head cables and two (2) connectors from each side to the front of the machine through the slots in the precision plate and disconnect. Note the orientation of the connector markings.

   2. Remove three (3) screws (two (2) 3/32" Allen and one (1) Phillips) holding the head assemblies to the precision plate and remove the heads. Support the heads when removing screws to prevent them from falling into the machine and becoming scratched or damaged.

   3. Apply protective covering over the top of the head stacks.

NOTE

When re-installing the heads, be sure the base plate of the head assembly is tight against the precision plate pin before tightening the three (3) mounting screws. Also make sure the connectors are properly connected before stowing the cables in the recorder.

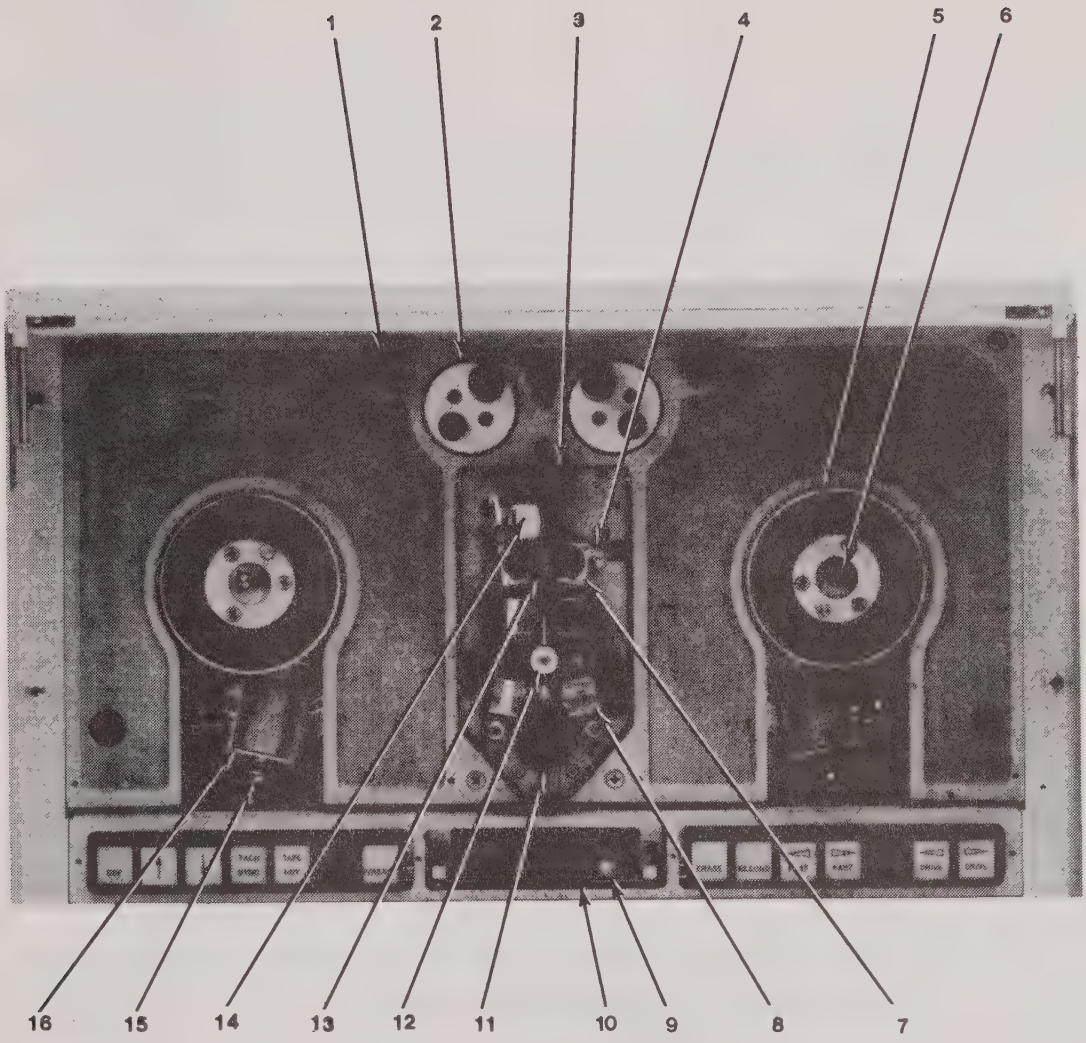

Legend:

1. Tape Guides (2)
2. Tension Sensor Assembly (2)
3. Tape Guides (2)
4. Pinch Roller Cable Adjustment
5. Reel Turntable (2)
6. Finned Reel Lock (1/4") (2)
7. Pinch Rollers (2)
8. Record/Reproduce Heads
9. Display PWB Adjust R11
10. Display PWB
11. Turnaround Idler
12. Septum
13. Pinch Roller
14. Erase Head
15. Brake Torque Solenoid Adjustment (2)
16. Brake Solenoid (2)

Figure 8-2. Recorder Assembly Locations (Front) With Front Panel Cover Removed

3. Remove the erase head by desoldering wires at the head. Be sure to note wire positions and the location of capacitor.

4. Remove the single Phillips screw from the head being careful not to damage the connectors.

5. Remove the erase head.

c. Tension Sensors Turntable

1) Remove two (2) flathead Phillips screws holding the tension sensor turntable assembly to the tension sensor shaft.

2) Remove the tension sensor turntable.

d. Reel Turntables

1) Remove slotted metric screw on the end of the reel shaft.

2) Remove finned shaft and spring.

3) Remove the three (3) flathead Phillips screws holding the turntable to the reel motor. Support the turntable to prevent its turning while removing mounting screws.

4) Remove the turntable and store it on its corked surface to protect the machined rear surface.

e. Pinch Rollers

1) Remove the flathead screw in the pinch roller cap.

2) Remove the pinch roller cap and roller assembly spacer on either side.

8-5. REMOVAL OF POWER SUPPLY (Refer to Figure 8-3.)

a. Remove power plug from Power Supply connector J50 at the rear of the recorder.

b. Unscrew mounting screws at top and bottom of Power Supply.

c. Pull Power Supply out from the recorder being careful not to damage Power Supply interconnections.

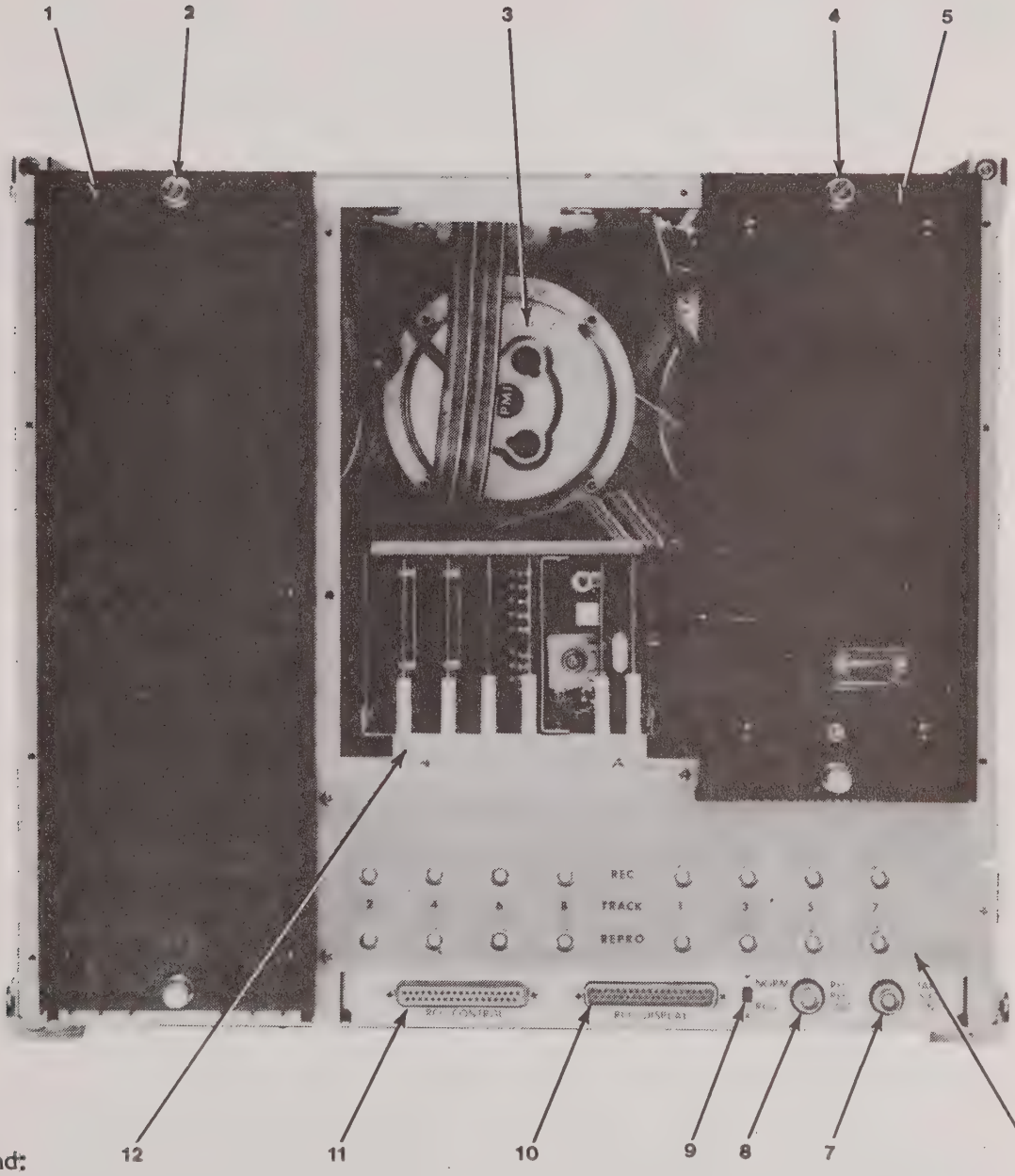

Legend:

1. Servo/MDA Module
2. Module Mounting Screws
3. Capstan Motor
4. Module Mounting Screws
5. Power Supply Module
6. BNC Panel (option) Record/Reproduce
7. BNC Connector Tape Signal In
8. BNC Connector Record Reference Out
9. RCU Switch
10. RCU Display Connector
11. RCU Control Connector
12. Preamplifier Card Cage

Figure 8-3. Recorder Assembly Locations (Rear) With Rear Cover Removed

8-6. REMOVAL OF SERVO/MDA MODULE (Refer to Figure 8-3.)

a. Unscrew mounting screws at the top and bottom of the Servo/MDA Module.

b. Pull module out from the recorder being careful not to damage interconnections.

c. Disconnect four (4) connectors at the top and one (1) pinch out connector at the bottom.

d. Pull module free of the recorder/reproducer and stand it on heat fins.

8-7. REMOVAL OF THE DISPLAY PWB ASSEMBLY (Refer to Figures 8-5 and 8-6.)

a. Remove the wraparound cover.

b. Locate the Display PWB Assembly on the top of the recorder, right side, over the Servo/MDA Assembly and pull up plastic mounting locks (one (1) on each side).

c. Raise the Display PWB Assembly to expose the three (3) pinch out connectors and remove these connectors from the PWB.

CAUTION

Support the Display PWB with one hand to prevent it dropping into the recorder and being damaged or causing damage to other recorder components. Before removing connectors, label and mark them for location.

d. Remove three (3) screws and three (3) washers from the mounting side (where the hinge is attached to the recorder) of the hinge.

e. Remove the Display PWB Assembly from the recorder.

8-8. REMOVAL OF THE REEL AMPLIFIER PWB, LEFT AND RIGHT (Refer to Figures 8-4A and 8-4B.)

a. Remove (24) screws from wraparound cover from the top and sides of the recorder. Remove the wraparound cover.

b. Remove the power supply and servo MDA modules (see paragraph 8-5 and Figure 8-3) from the rear of the recorder.

c. Locate the two reel amplifier PWBs. (See Figure 8-2.) and disconnect the interconnecting cables from the recorder.

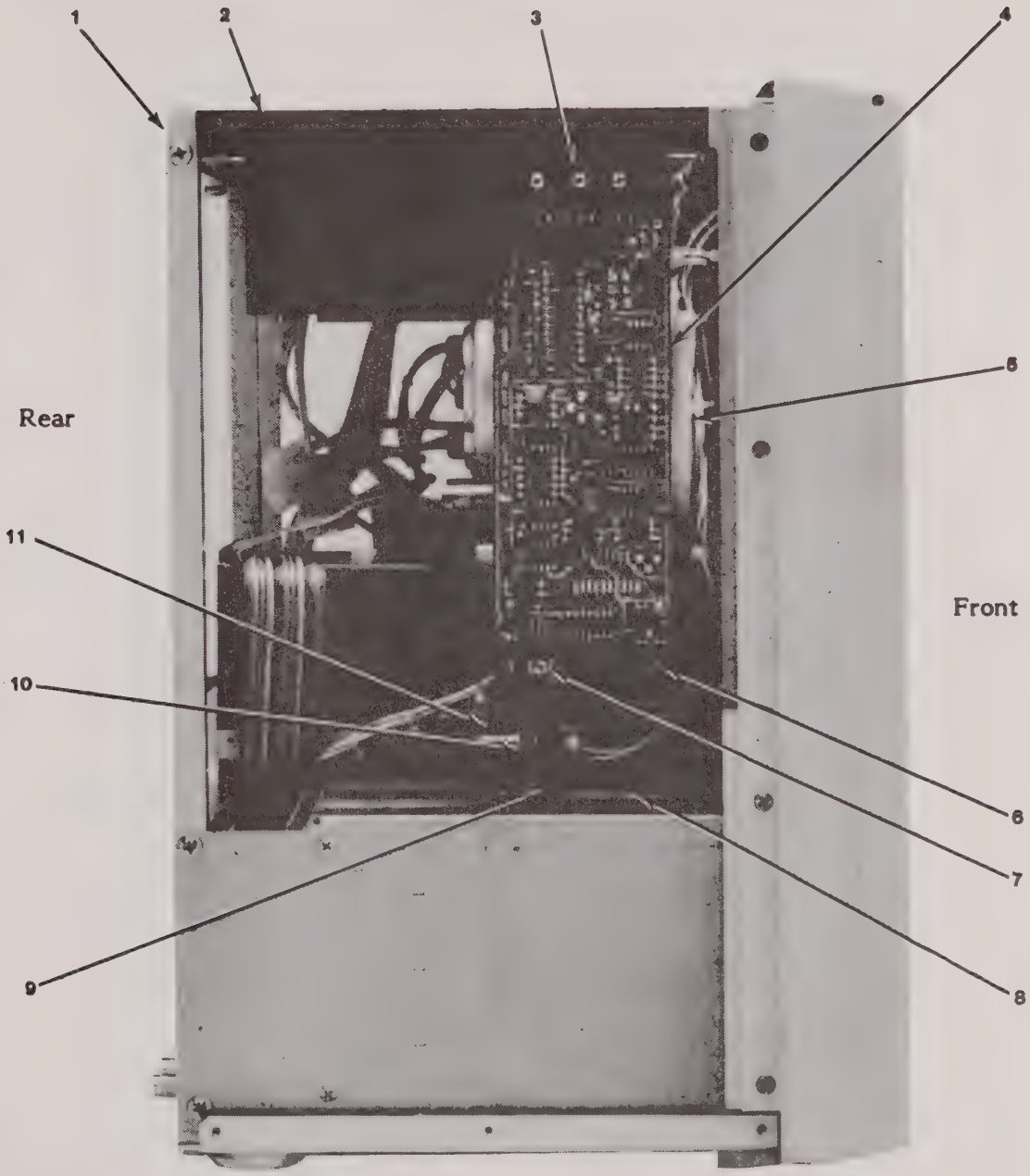

Figure 8-4A. Recorder Subassembly Locations (Left Side)

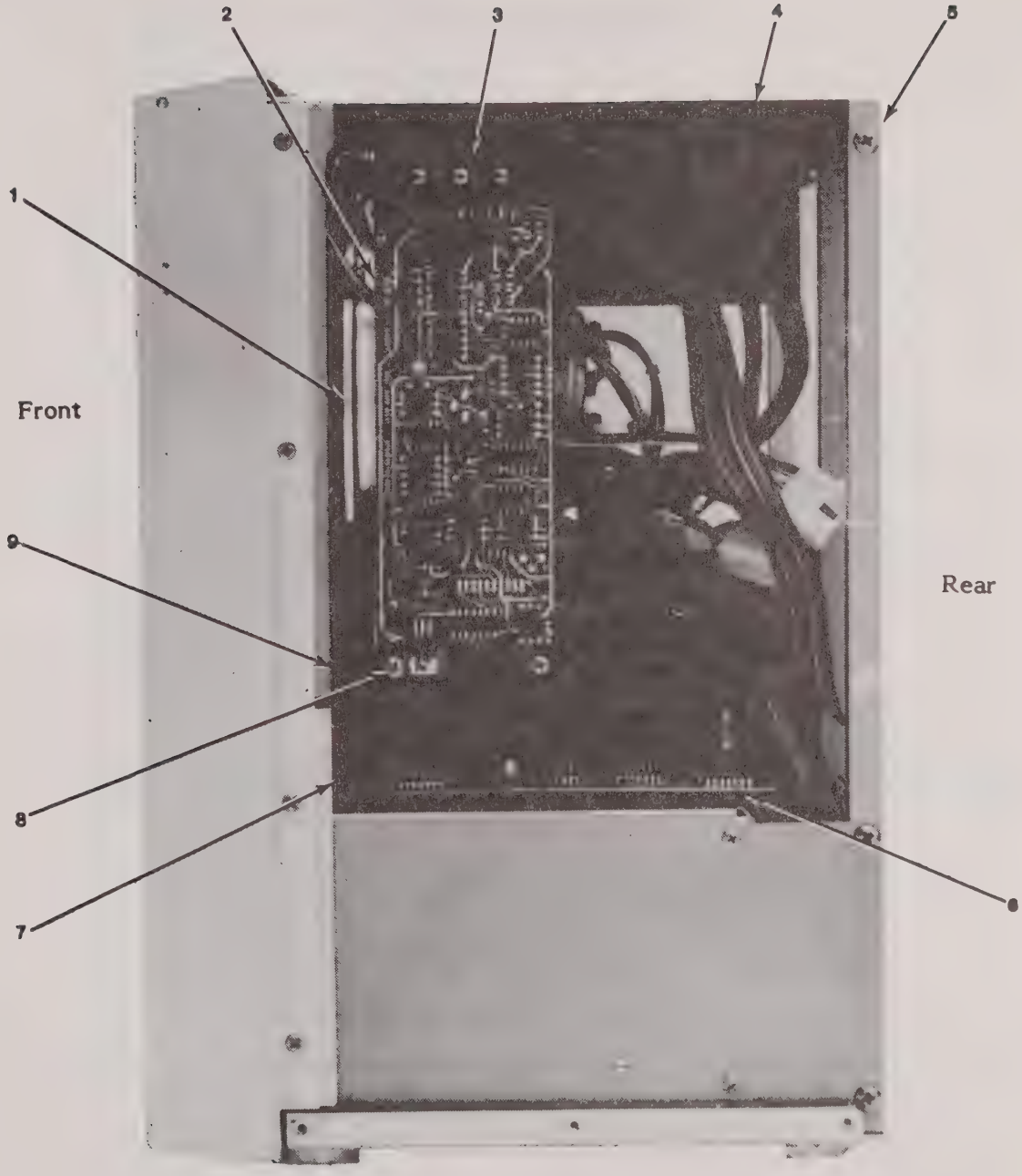

Figure 8-4B. Recorder Subassembly Locations (Right Side)

Figure 8-4A. Legend

1. Upper PWB Bracket Attaching Screw Location
2. Heat Sink
3. Upper PWB Mounting Bracket
4. Left Reel Amplifier PWB
5. Left Reel Drive Motor
6. Lower PWB Attaching Screws
7. Lower PWB Attaching Screws
8. Switch Logic PWB
9. Power Supply Bracket Mounting Screws
10. Power Supply Mounting Bracket
11. Power Supply Connector.

Figure 8-4B. Legend

1. Right Reel Motor
2. Right Reel Amplifier PWB
3. Upper PWB Mounting Bracket
4. Heat Sink
5. Upper PWB Bracket Attaching Screw Location
6. Control Logic PWB
7. Control Logic PWB Mounting Screw Location
8. Lower PWB Attaching Screws
9. Lower Mounting Bracket Attaching Screw Location

d. Remove the two (2) 5/32" Allen screws front and rear from the heat sinks. Support the heat sink and PWB during removal of the screws to prevent damage from the assembly falling into the recorder.

e. Carefully pull the PWBs and brackets from their mounting until the four (4) interconnecting cables are visible and easily accessible.

f. Remove the cables from the PWB.

g. Remove the PWB from the recorder.

h. Remove the brackets and heat sink from the PWB if reinstalling a new PWB, as follows:

   1) Remove four (4) Phillips screws (two (2) on the top and two (2) on the bottom) of the PWB.

   2) Remove on (1) Phillips screw on each of the power transistors on the bottom of the heatsink.

   3) Remove three (3) Phillips screws on the top of the heatsink.

   4) Remove the PWB from the heatsink.

8-9. REMOVAL OF BIAS MIXER, BIAS DRIVER, AND REFERENCE OSCILLATOR PWBs (Refer to Figures 8-3 and 8-5.)

a. Remove six (6) screws from the rear cover exposing the interior of the recorder.

b. Locate six (6) PWBs in the rear card cage.

c. Carefully and firmly grip the handle of the PWB to be removed.

d. With an increasing and steady pull, taking care to apply force in one direction away from the recorder, pull the PWB free of the card cage.

8-10. REMOVAL OF CAPSTAN MOTOR ASSEMBLY (Refer to Figures 8-5 and 8-6.)

a. Remove wraparound cover, rear cover, and overlay cover from front of recorder. (Refer to paragraph 8-3b, 8-3e, and 8-3f.)

b. Remove the septum and head cover.

c. While supporting the capstan motor, remove three (3) 9/64" Allen screws from the front of the recorder.

d. Remove Power connector from the Servo/MDA module.

e. Carefully pull the capstan motor free of the recorder to the rear.

Figure 8-5. Legend

1. Heat Sink Mounting Screw Location
2. Display PWB Hinge Mounting Screw
3. Display PWB (Lowered position)
4. Capstan Motor Attaching Screw (4)
5. Capstan Motor
6. Reel Motor Attaching Screw (3)
7. Left Reel Motor
8. Heat Sink Mounting Bracket
9. Left Reel Amplifier PWB
10. Power Supply Connector
11. Switch Logic PWB Attaching Screw Location (2)
12. Switch Logic PWB
13. Power Supply Connector Mounting Bracket
14. Interconnect PWB Location
15. Rear Card Cage Attaching Screw Location (2)
16. Control Logic PWB
17. Right Reel Motor

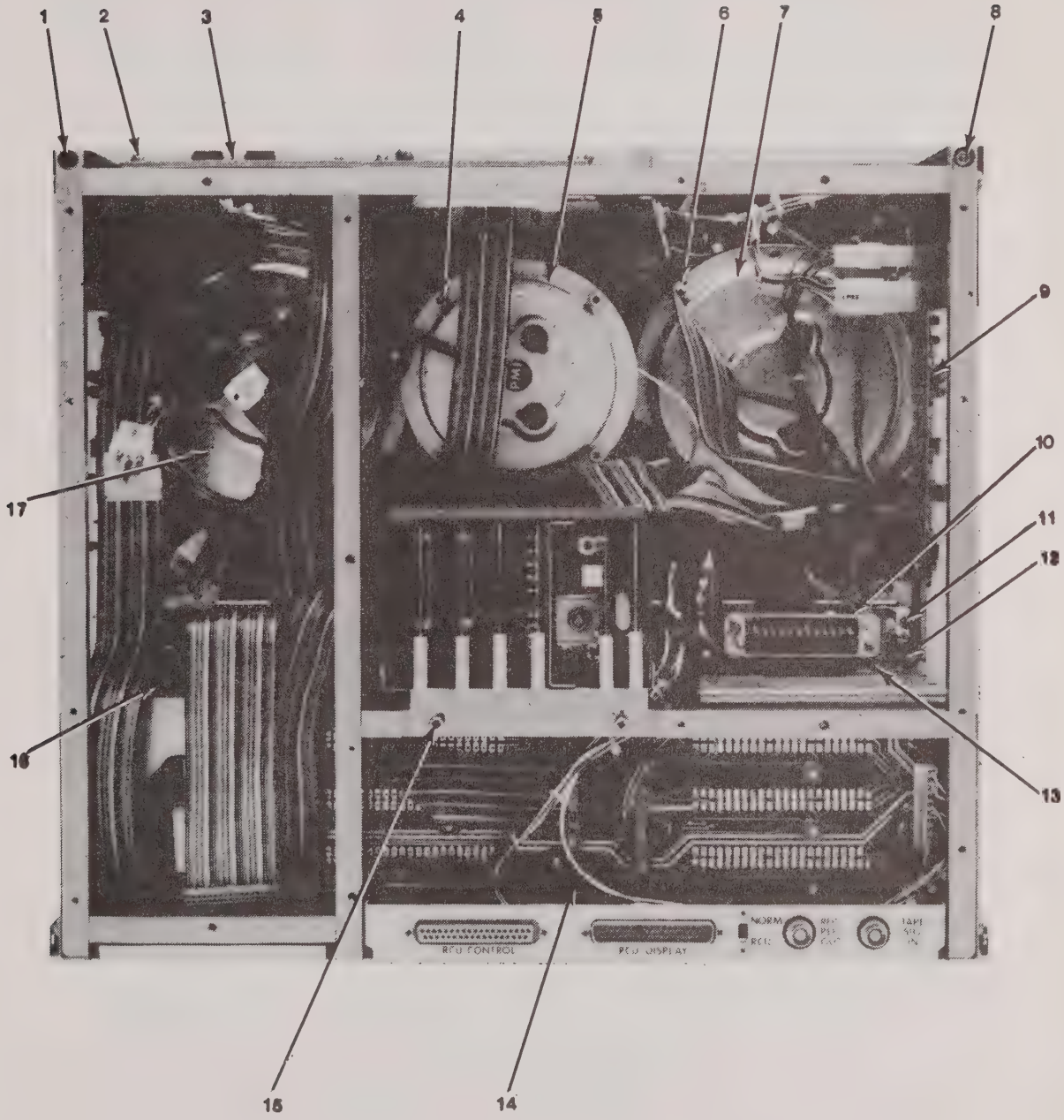

Figure 8-5. Recorder Subassembly Locations (Rear) With Servo/MDA and Power Supply Modules Removed

8-11. REMOVAL OF THE PREAMPLIFIER, CARD CAGE (Refer to Figures 8-3 and 8-5.)

NOTE

It is not necessary to remove the preamplifier, bias, and oscillator PWBs when removing the entire card cage.

a. Remove wraparound and rear covers (refer to paragraphs 8-3e and 8-3f).

b. Remove two (2) screws from the lower part of the card cage.

c. Remove capstan motor assembly (refer to paragraph 8-10).

d. Pull four (4) modules from the right front of the recorder.

e. Disconnect all head connectors and push wires and connectors back into the housing through the slots in the precision plate.

f. Remove one (1) nut from the bottom of the card cage. Access to the nut is in module mounting slot.

g. Pull card cage free of the recorder until all other connectors are accessible.

h. Disconnect eight (8) connectors: two (2) from the I/C interconnect PWB at the bottom of the recorder, one (1) from the control PWB behind the left side switch assembly, one (1) from the switch logic assembly PWB behind the right side switch assembly, two (2) from the display PWB at the top of the recorder,
and the two (2) J61 connectors on the right of the card cage PWB.

Remove the four (4) head connectors from the card cage PWB.

Remove card cage ground wire to precision plate at precision plate rear head assembly.

Remove the card cage entirely from the recorder.

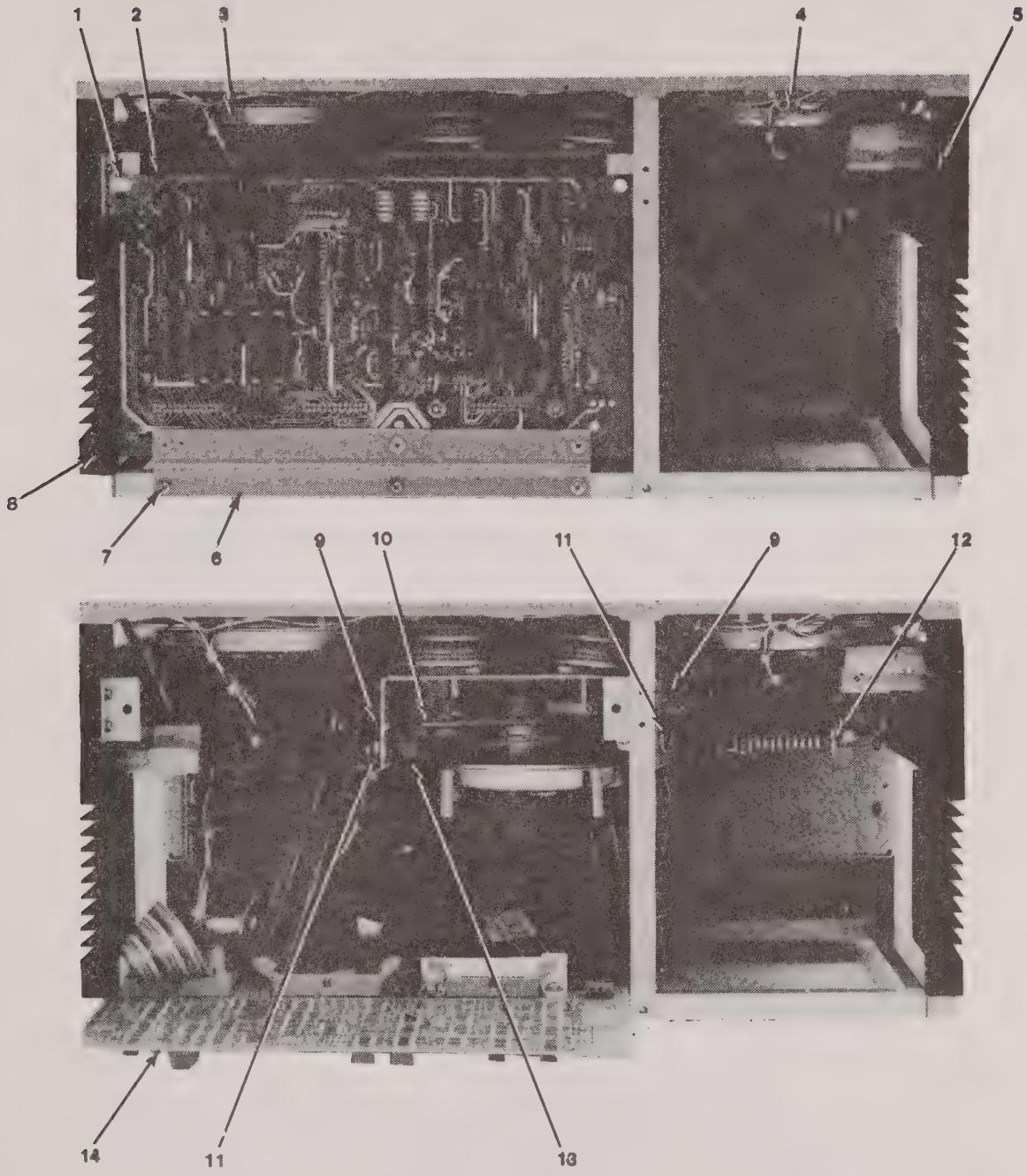

Figure 8-6. Recorder Subassembly Locations (From Top)

Figure 8-6. Legend

1. Display PWB Mounting Locks
2. Display PWB (Lowered Position)
3. Right Reel Drive Motor
4. Left Reel Drive Motor
5. Left Reel Amplifier PWB
6. Display PWB Mounting Hinge
7. Display PWB Mounting Hinge Screw
8. Heat Sink
9. Tension Sensor Spring Adjustment Point
10. Tension Sensor Spring
11. Dashpot Adjustment
12. Power Supply Connector and Mounting Bracket
13. Dashpot
14. Display PWB (Raised position)

8-12. REMOVAL OF LEFT AND RIGHT DRIVE MOTORS WITH BRAKE ASSEMBLY (Refer to Figures 8-3, 8-4A, 8-4B, 8-5, and 8-6.)

a. Remove the plastic protective, wraparound, rear, and overlay covers from the recorder (refer to paragraphs 8-3a, 8-3b, 8-3d, and 8-3f).

b. Remove the power supply module and the servo/MDA module from the rear of the recorder (refer to paragraphs 8-4 and 8-5.

c. Remove the left or right reel amplifier brackets from the recorder (Refer to paragraph 8-8) and disconnect the four connectors. Set the reel amplifier PWBs aside.

d. Remove four (4) screws disconnecting the reel motor from the precision plate, while supporting the reel motor.

e. Pull the reel motor free from the recorder and remove. If necessary, the display PWB at the top of the recorder over the right reel motor may be unlocked and raised on its hinge to provide more room for removing the right reel motor.

8-13. REMOVAL OF THE UP/DOWN SWITCH LOGIC PWB ASSEMBLY AND THE CONTROL PWB ASSEMBLY (Refer to Figures 8-3, 8-4A, 8-4B, 8-5, and 8-6.)

NOTE

From the rear of the recorder, the up/down switch logic PWB assembly is on the right behind the switch assembly. The control PWB assembly is on the left.

a. Remove the wraparound and rear covers of the recorder (refer to paragraph 8-3).

b. Remove the power supply module and the servo/MDA PWB. (Refer to paragraphs 8-4 and 8-5.)

c. For each assembly, remove two (2) Phillips screws; one (1) on each side of the upper part of assembly. From the Control Logic PWB, remove 1 screw from the rear of the printed wiring board.

d. For the right hand Switch Logic PWB (from the rear point of view) remove two (2) screws from the L shaped bracket supporting the power supply connection. Remove this bracket.

CAUTION

When removing the switch assembly and the respective PWBs, be careful that they are not damaged due to excessive twisting or pulling force.

e. Disconnect two (2) connectors on the Up/down switch logic PWB and three (3) connectors on the control logic PWB.

f. Both of the switch assemblies and PWBs can be pulled from their mountings by carefully lifting and turning the boards until the assemblies are free of their mountings.

8-14. REMOVAL OF THE FOOTAGE COUNTER MODULE (Refer to Figure 8-2).

a. Remove the bezel plate (refer to paragraph 8-3.b.).

b. Remove two (2) screws in the front on either side of the PWB.

CAUTION

When removing the PWB do not grasp the display.

c. Pull the PWB from the front of the recorder through the slot in the precision plate.

d. Remove one (1) connector and remove the PWB from the recorder.

Table 8-2. Major Assemblies 1/4" Configuration

300090-01	PWB Assy, Control Logic	1
300030-01	PWB Assy, UP-Down Switch Logic	1
300060-01	PWB Assy, Record Bias Mixer	1
300050-01	PWB Assy, Bias Driver	1
300055-01	PWB Assy, Reference Oscillator	1
300120-01	Precision Plate Assy, 1/4"	
300200-01	Capstan Motor Assy	1
300110-01	PWB Assy, Display	1
300165-01	Power Supply Assy	1
300085-01	PWB Assy, Servo/MDA	1
300105-01	PWB Assy, Footage Counter	1
300415-01	Guide Assy, 1/4"	2
300375-01	Tension Sensor Assy, L.H.	1
300375-02	Tension Sensor Assy, R.H.	1
300195-01	PWB Assy, Reel Amp	2
300180-01	Reel Motor Assy, L.H. 1/4"	1
300180-02	Reel Motor Assy, R.H. 1/4"	1
300144-01	Trim, Extrusion Fab, Top	1
300142-01	Side Cabinet Extrusion Fab	1
300142-02	Side Cabinet Extrusion Fab	1
300146-01	Panel, Overlay	1
300391-01	Door	1
300426-01	Cable Assy, Control- Servo	1

NOTE: When ordering prefix above part numbers with PD- (Example: PD-30090-01 PWB Assy, Control Logic).

Table 8-3. Major Assemblies 1/2" Configuration

NOTE

All other major configurations are the same as for the 1/4" configuration.

300120-02	Precision Plate Assy, 1/2"	1
300415-02	Guide Assy, 1/2"	2
300180-03	Reel Motor Assy, L.H. 1/2"	1
300180-04	Reel Motor Assy, R.H. 1/2"	1

NOTE: When ordering prefix above part numbers with PD- (Example: PD-30090-01 PWB Assy, Control Logic).

SECTION IX.

DIAGRAMS

9-1. INTRODUCTION

All schematics and diagrams necessary for use by an operator or technician for maintaining, calibrating, and diagnosing faults in the 6500 Recorder are provided in this section. These schematics and diagrams relate only to the procedures in this manual which are written to the subassembly level.

9-2. DIAGRAM LIST

Drawing No.	FO No.	Title
300032	FO-1	Schematic Diagram, UP/DOWN Switch Logic
300037	FO-2	Schematic Diagram, Preamp Card Cage I/C (Sheet 1 of 2)
	FO-2	Schematic Diagram, Preamp Card Cage I/C (Sheet 2 of 2)
300042	FO-3	Schematic Diagram, Head Switch
300047	FO-4	Schematic Diagram, Preamp PWB
300052	FO-5	Schematic Diagram, Bias Driver
300057	FO-6	Schematic Diagram, Reference Oscillator
300062	FO-7	Schematic Diagram, Record/Bias Mixer
300087	FO-8	Schematic Diagram, Servo/MDA Module (Sheet 1 of 3)
	FO-8	Schematic Diagram, Servo/MDA Module (Sheet 2 of 3)
	FO-8	Schematic Diagram, Servo/MDA Module (Sheet 3 of 3)
300092	FO-9	Schematic Diagram, Control Logic PWB
300097	FO-10	Schematic Diagram, Reel Amplifier PWB
300104	FO-11	Schematic Diagram, Footage Counter PWB
300109	FO-12	Schematic Diagram, Display PWB (Sheet 1 of 2)
	FO-12	Schematic Diagram, Display PWB (Sheet 2 of 2)

Drawing No.	FO No.	Title
300161	FO-13	Schematic Diagram, D.C. Switching, Power Supply
300166	FO-14	Schematic Diagram, Interconnect Diagram, Power Supply
300197	FO-15	Schematic Diagram, Reel Motor Assembly
300222	FO-16	Schematic Diagram, Capstan Motor/Tach Preamp
300271	FO-17	Schematic Diagram, Audio Module
300278	FO-18	Schematic Diagram, FM Record/Reproduce Module (Sheet 1 of 3)
	FO-18	Schematic Diagram, FM Record/Reproduce Module (Sheet 2 of 3)
	FO-18	Schematic Diagram, FM Record/Reproduce Module (Sheet 3 of 3)
300286	FO-19	Schematic Diagram, Direct Module (Sheet 1 of 2)
	FO-19	Schematic Diagram, Direct Module (Sheet 2 of 2)
300292	FO-20	Schematic Diagram, Calibrator Attenuator
300311	FO-21	Interconnect Diagram, Calibrator Module
300322	FO-22	Schematic Diagram, Output Stage, Calibrator (Sheet 1 of 2)
	FO-22	Schematic Diagram, Output Stage, Calibrator (Sheet 2 of 2)
300323	FO-23	Schematic Diagram, Linear Input, Calibrator
300324	FO-24	Schematic Diagram, Digital, Calibrator (Sheet 1 of 2)
	FO-24	Schematic Diagram, Digital, Calibrator (Sheet 2 of 2)
300337	FO-25	Schematic Diagram, Voltage Regulators, Power Supply
300347	FO-26	Schematic Diagram, Card Cage I/C

Drawing No.	FO No.	Title
300375	FO-27	Schematic Diagram, Tension Sensor
300402	FO-28	Schematic Diagram, FM Filter and Discrimination
300497	FO-29	Schematic Diagram, DC Preregulator
300517	FO-30	Schematic Diagram, Switch PWB-RCU
300527	FO-31	Schematic Diagram, RCU Logic (Sheet 1 of 3)
	FO-31	Schematic Diagram, RCU Logic (Sheet 2 of 3)
	FO-31	Schematic Diagram, RCU Logic (Sheet 3 of 3)
300532	FO-32	Schematic Diagram, RCU Front Panel PWB (Sheet 1 of 3)
	FO-32	Schematic Diagram, RCU Front Panel PWB (Sheet 2 of 3)
	FO-32	Schematic Diagram, RCU Front Panel PWB (Sheet 3 of 3)

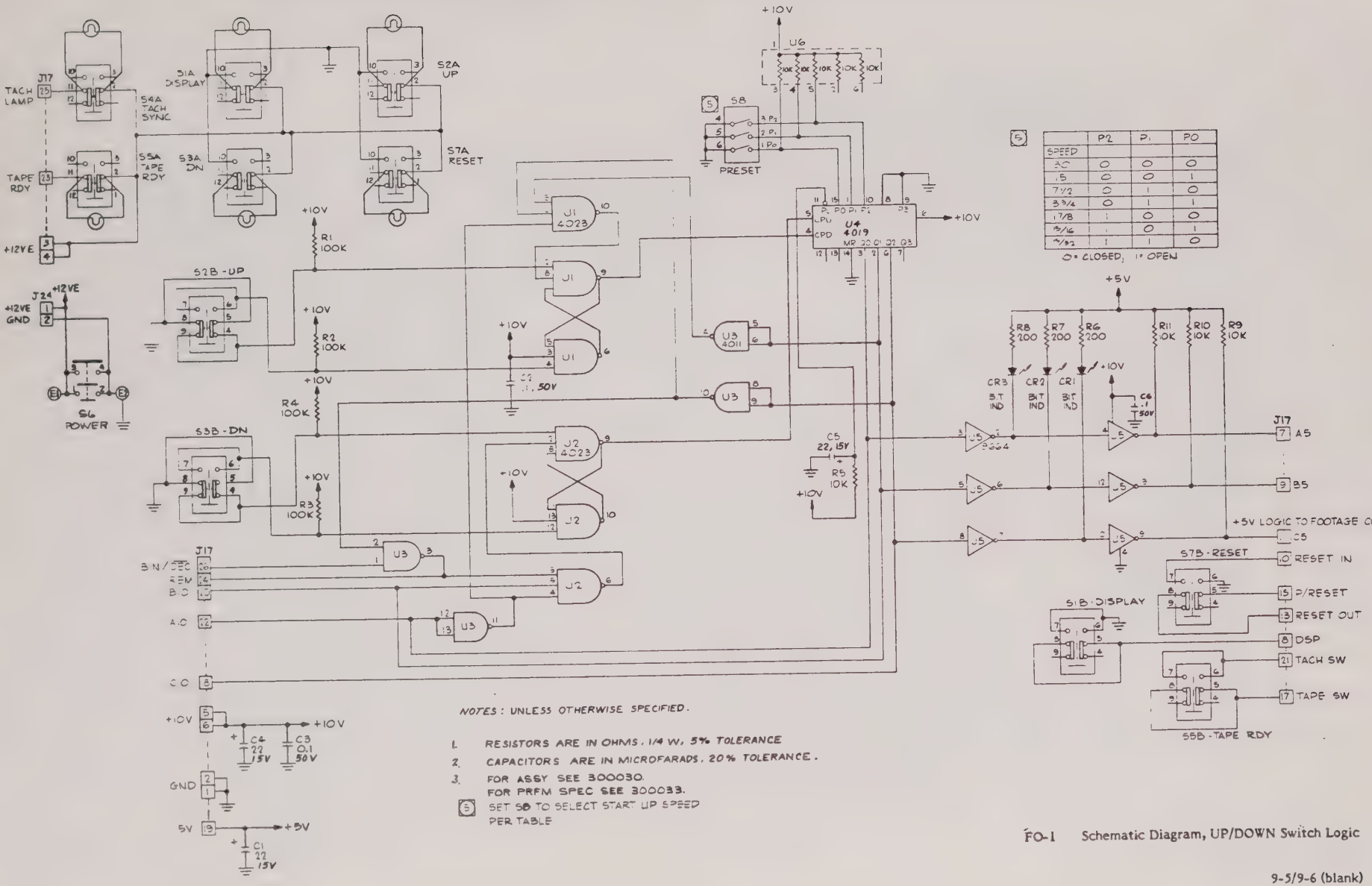

NOTES: UNLESS OTHERWISE SPECIFIED.

1. RESISTORS ARE IN OHMS, 1/4 W, 5% TOLERANCE
2. CAPACITORS ARE IN MICROFARADS, 20% TOLERANCE.
3. FOR ASSY SEE 300030.
   FOR PRFM SPEC SEE 300033.

[5] SET S8 TO SELECT START UP SPEED PER TABLE

FO-1 Schematic Diagram, UP/DOWN Switch Logic

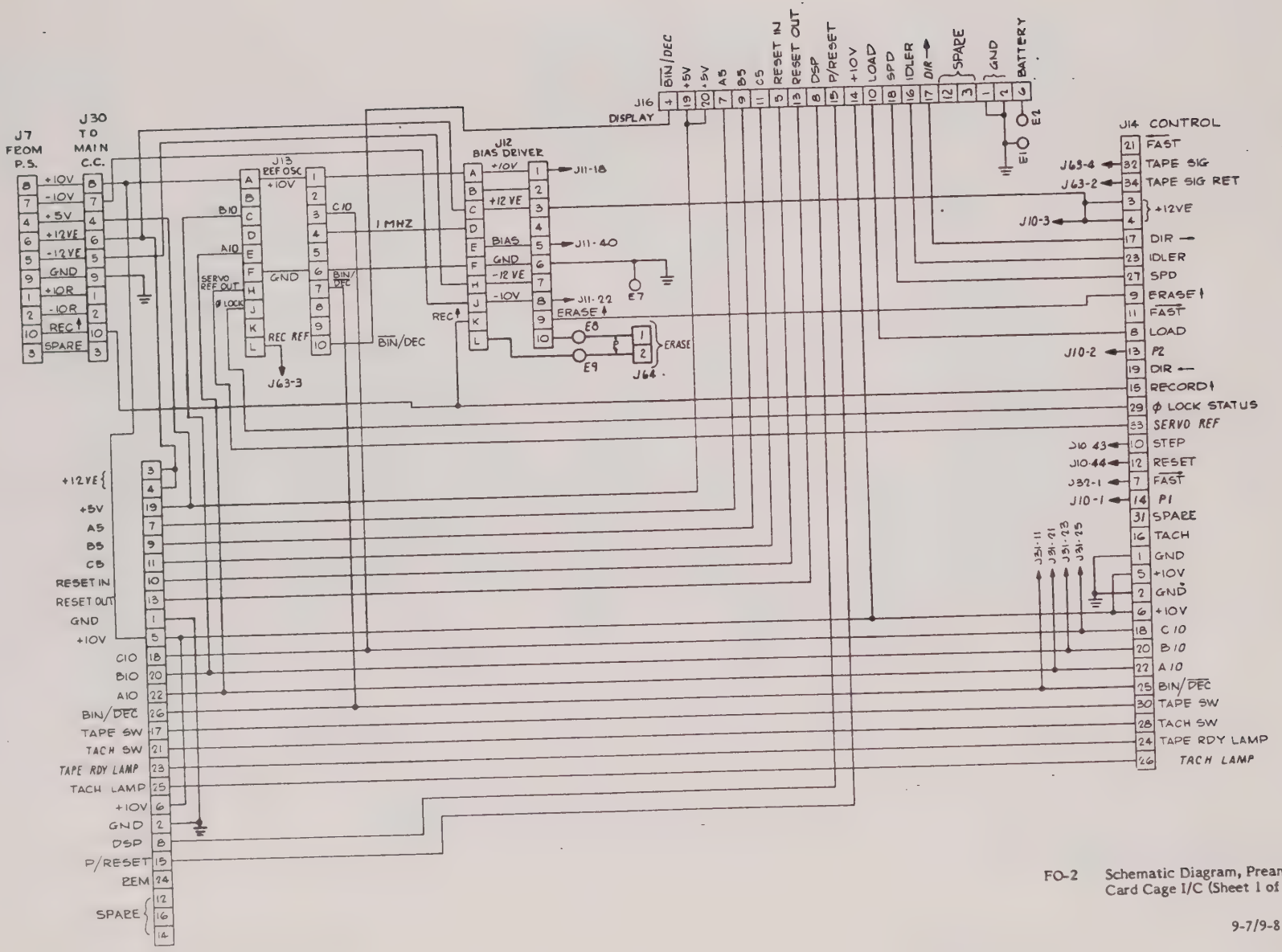

FO-2 Schematic Diagram, Preamplifier Card Cage I/C (Sheet 1 of 2)

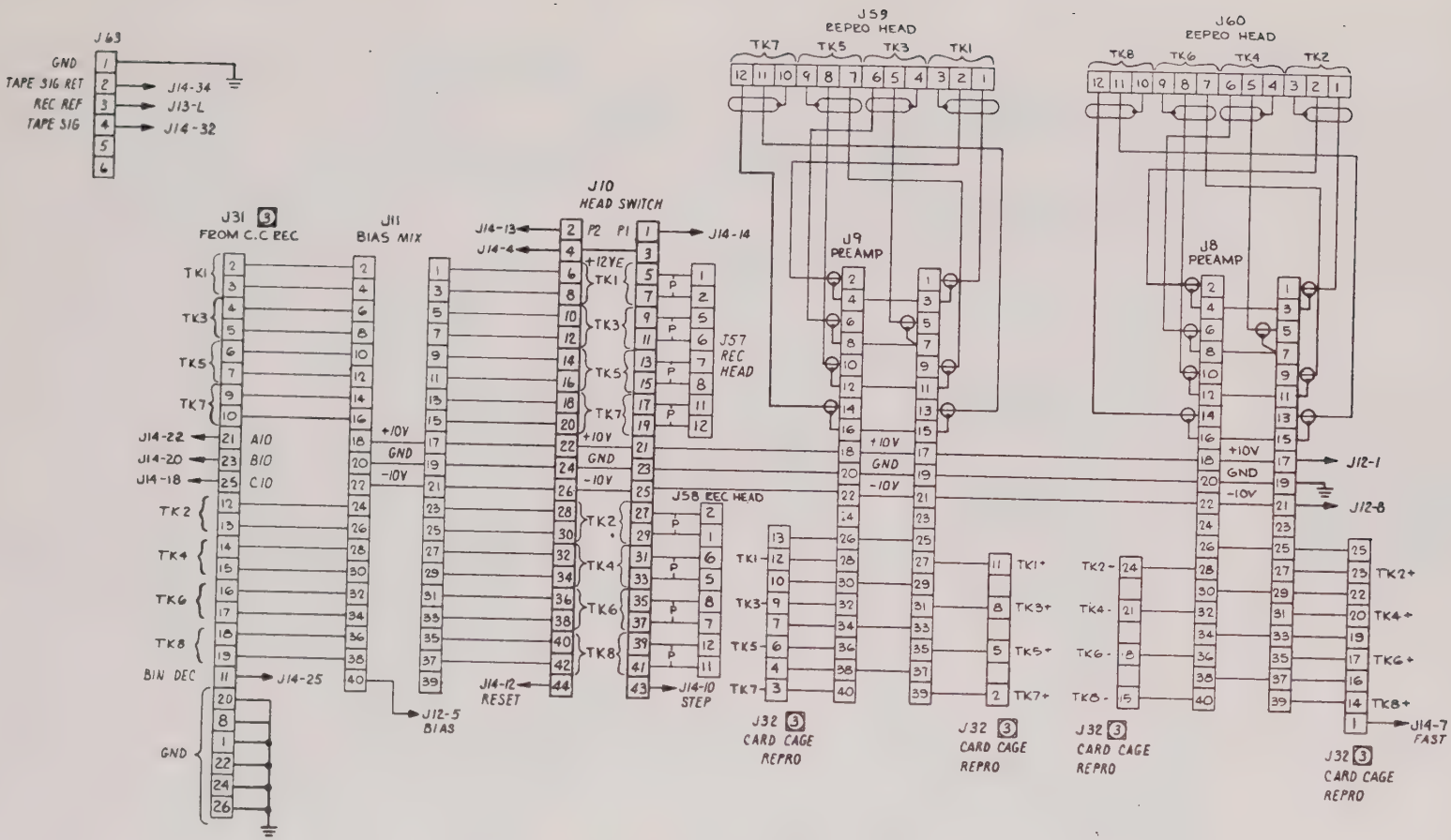

NOTES; UNLESS OTHERWISE SPECIFIED:

1. FOR ASSY SEE PL 300035-01.
3. PINS 3,5,7,10,12,14,16 & 18 OF J31 ARE GROUND.
   PINS 4,7,10,13,16,19,22,25 & 26 OF J32 ARE GROUND.

FO-2 Schematic Diagram, Preamplifier Card Cage I/C (Sheet 2 of 2)

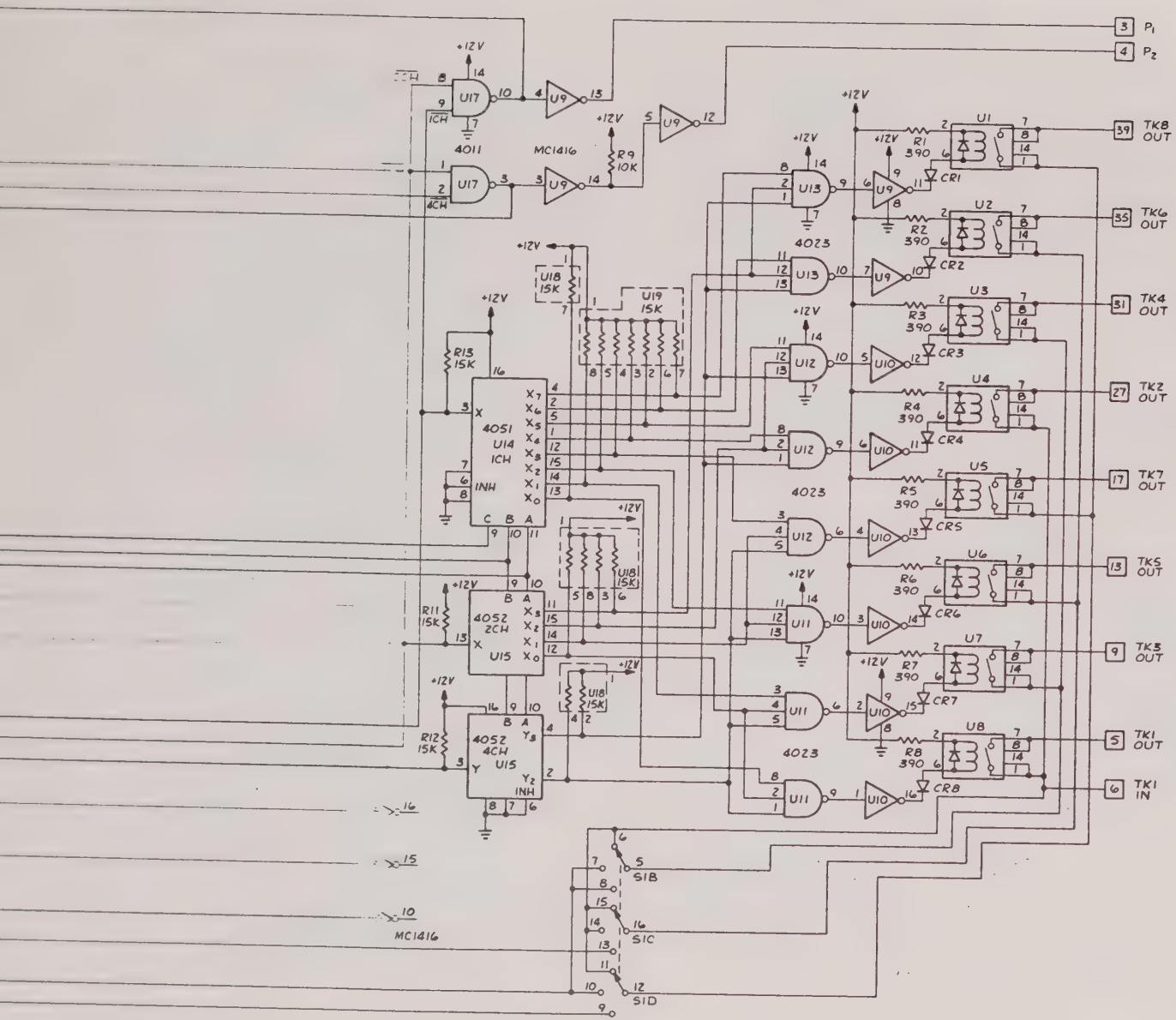

NOTES, UNLESS OTHERWISE SPECIFIED:

1. FOR ASSY SEE 300040, FOR PRFM SPEC SEE 300043.
2. RESISTORS ARE IN OHMS, 1/4 W, 5%.
3. CAPACITORS ARE IN MICROFARADS, 50V, 20%.
4. CR1-8 ARE HLMP1400.
5. U1-8 ARE W171DIP-7.

FO-3 Schematic Diagram, Head Switch

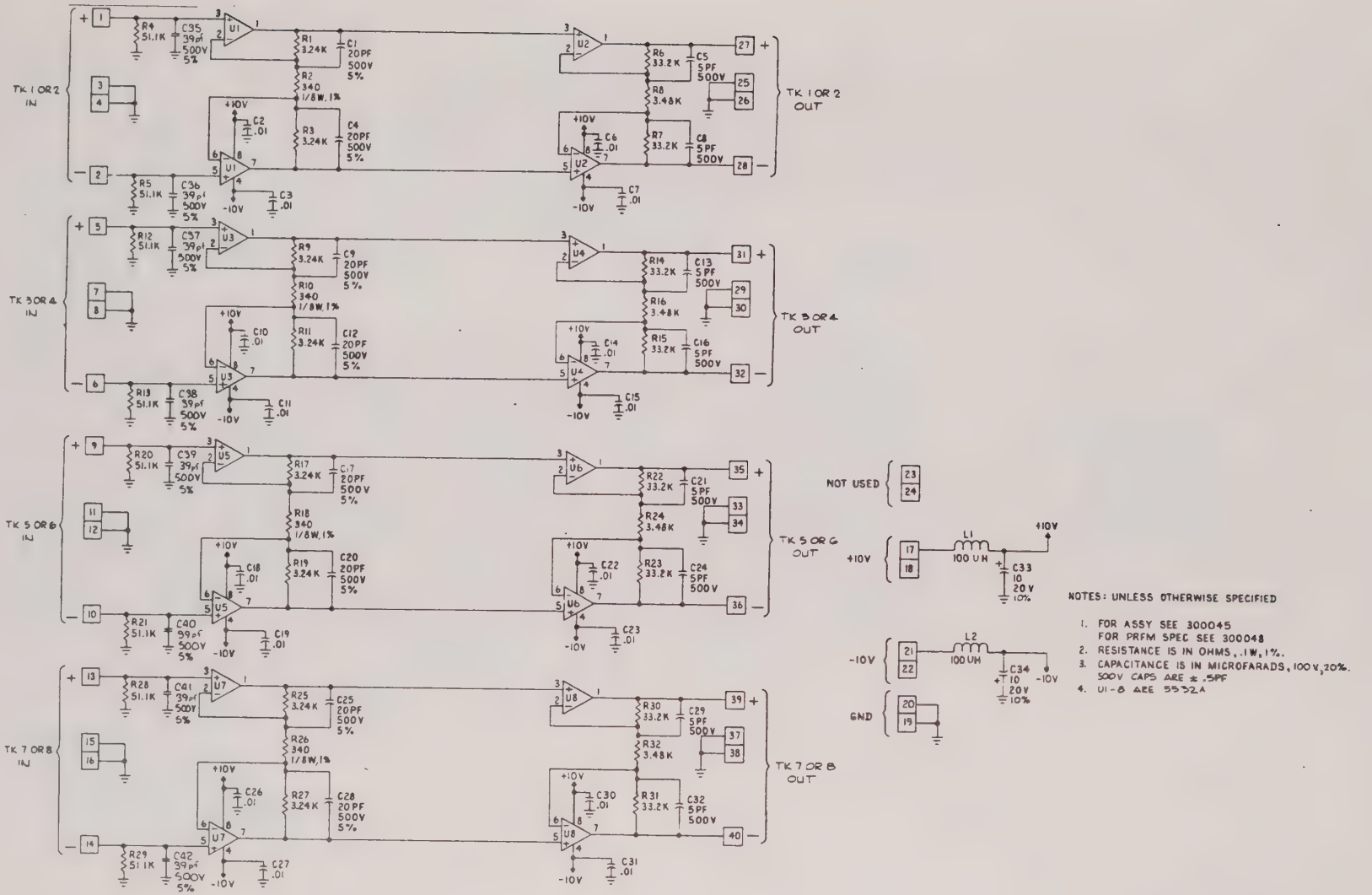

FO-4 Schematic Diagram, Preamp PWB

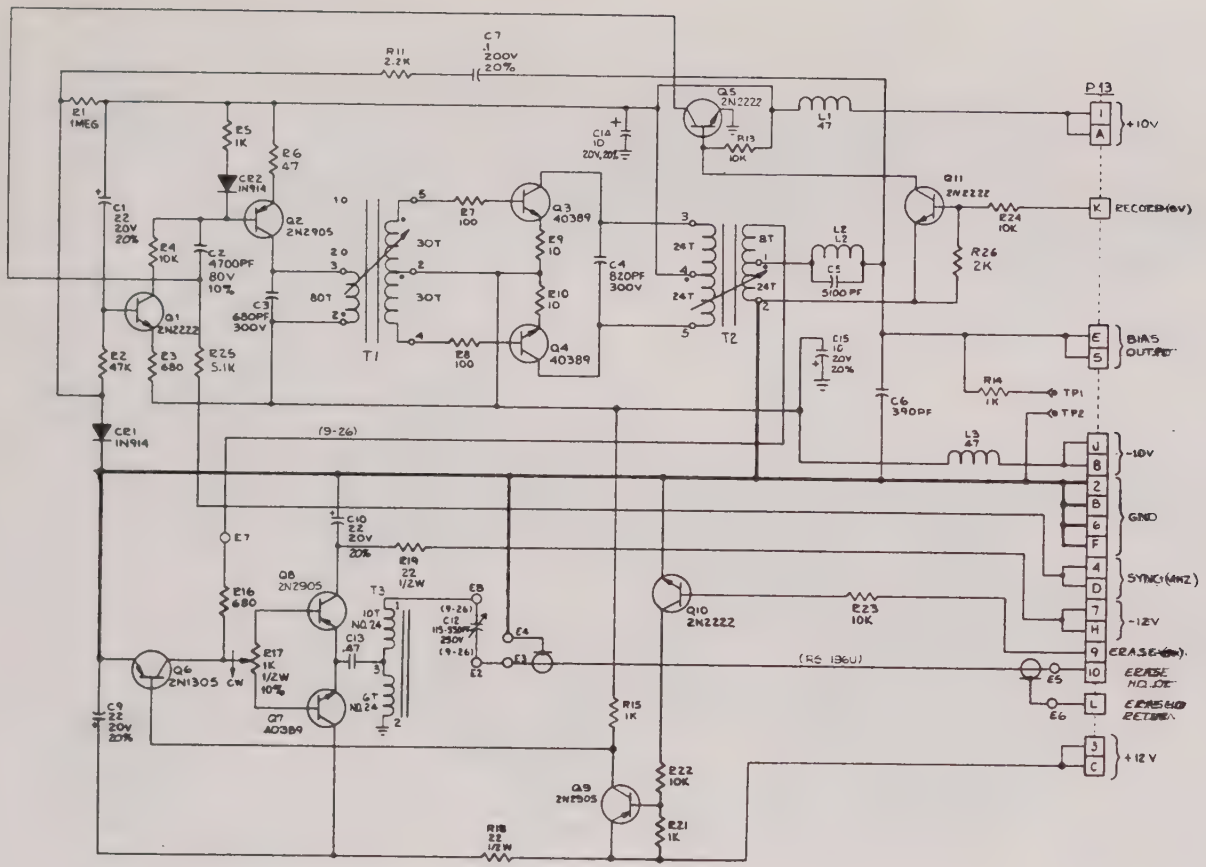

REFERENCE DESIGNATION	
LAST USED	NOT USED
C15	C11, C8
E26	E12
Q11	–
T3	–
L3	–
CR2	–
TP2	–
E8	E1

NOTES; UNLESS OTHERWISE SPECIFIED:

1. FOR ASSY SEE PL 300050-01
   FOR PERM SPEC SEE 300053.
2. RESISTORS ARE IN OHMS, ¼W, 5%.
3. CAPACITORS ARE IN MICROFARADS, 500V, 5%.
4. INDUCTORS ARE IN MICROHENERIES, 10%.

FO-5 Schematic Diagram, Bias Driver

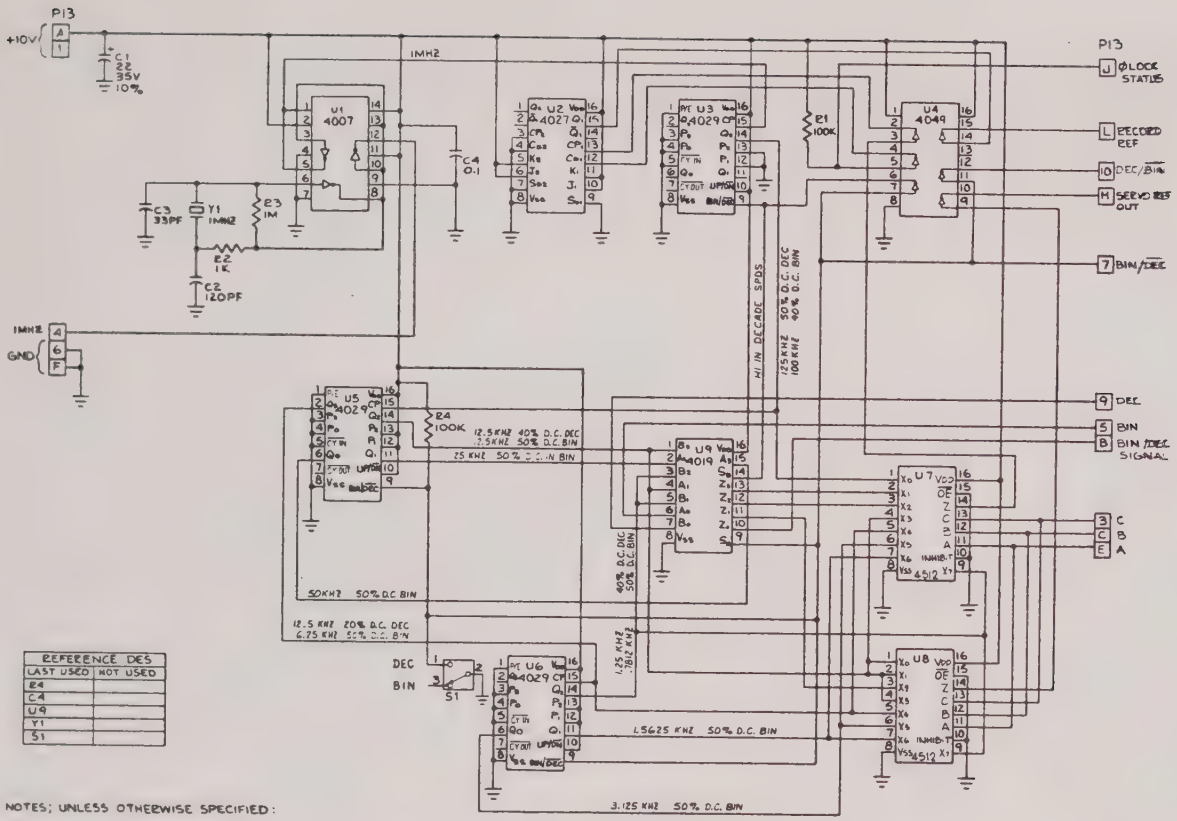

REFERENCE DES	
LAST USED	NOT USED
R4	
C4	
U9	
Y1	
S1	

SPEED - FREQUENCY CHART

SPEED	C	B	A	DEC/BIN	RECORD REF FREQUENCY (PIN L)	SERVO REF FREQUENCY (PIN H)
30	0	0	0	0	50 KHZ	12.5 KHZ
15	0	0	1	0	25 KHZ	12.5 KHZ
7 1/2	0	1	0	0	12.5 KHZ	12.5 KHZ
3 3/4	0			0	6.25 KHZ	12.5 KHZ
1 7/8		0	0	0	3.125 KHZ	6.25 KHZ
15/16		0	1	0	1.5625 KHZ	3.125 KHZ
15/32	1	1	0	0	781.25 HZ	1.5625 KHZ
37.5	0	0	0	1	62.5 KHZ	12.5 KHZ
3.75	0	0	1	1	6.25 KHZ	2.5 KHZ
.375	0	1	0	1	625 KHZ	1.25 KHZ

NOTES; UNLESS OTHERWISE SPECIFIED:

1. FOR ASSY SEE PL 300055-01, FOR PERFM SPEC SEE 300058.
2. RESISTORS ARE IN OHMS, ¼ W, 5%.
3. CAPACITORS ARE IN MICROFARADS, 50V, 20%.

FO-6 Schematic Diagram, Reference Oscillator

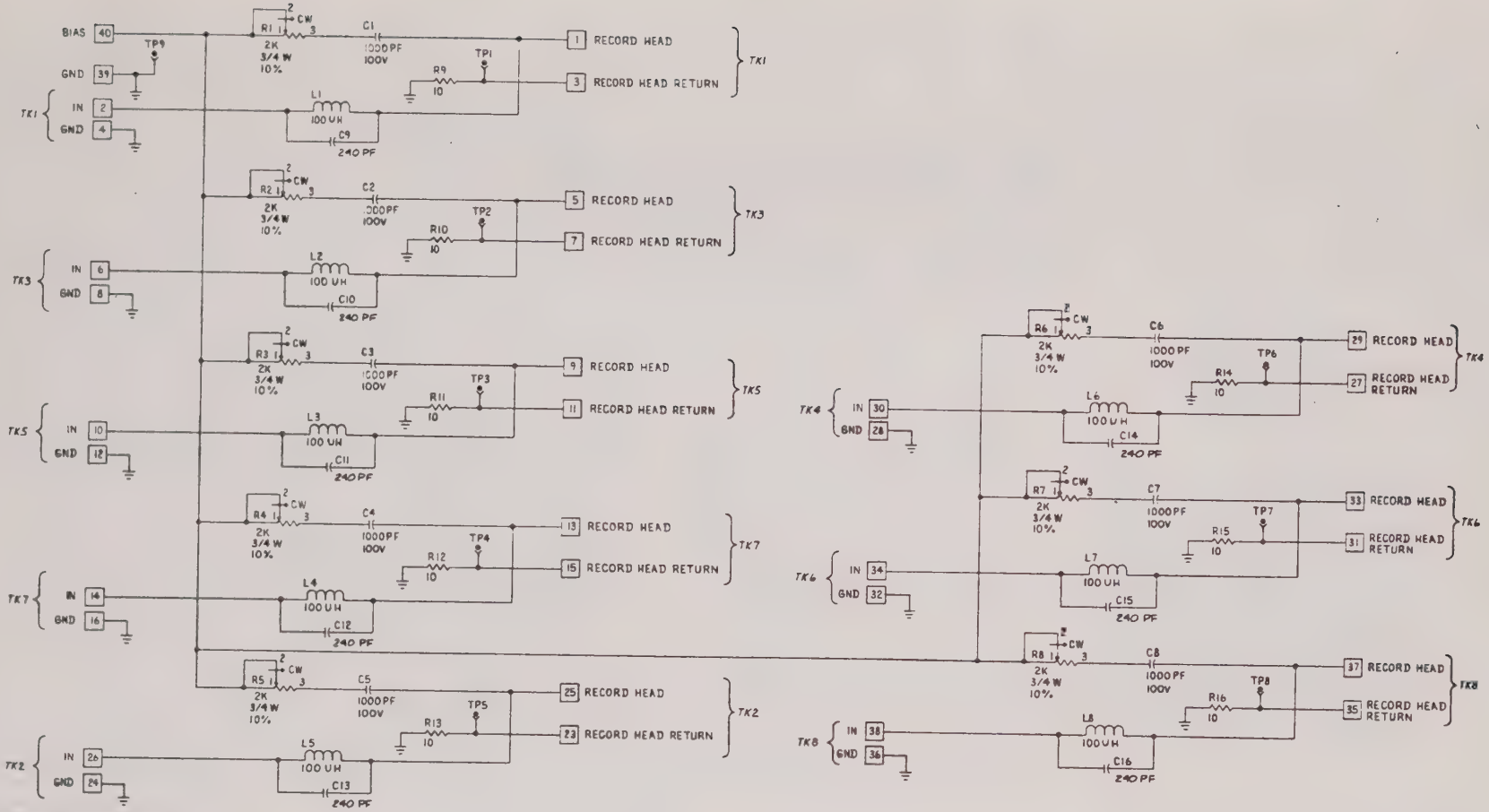

NOTES: UNLESS OTHERWISE SPECIFIED

1. FOR ASSY SEE 300060.
   FOR PRFM SPEC SEE 300063.
2. CAPACITORS ARE IN MICROFARADS, 500V, 5%.
3. RESISTORS ARE IN OHMS, 1/4W, 5%.

FO-7 Schematic Diagram, Record/Bias Mixer

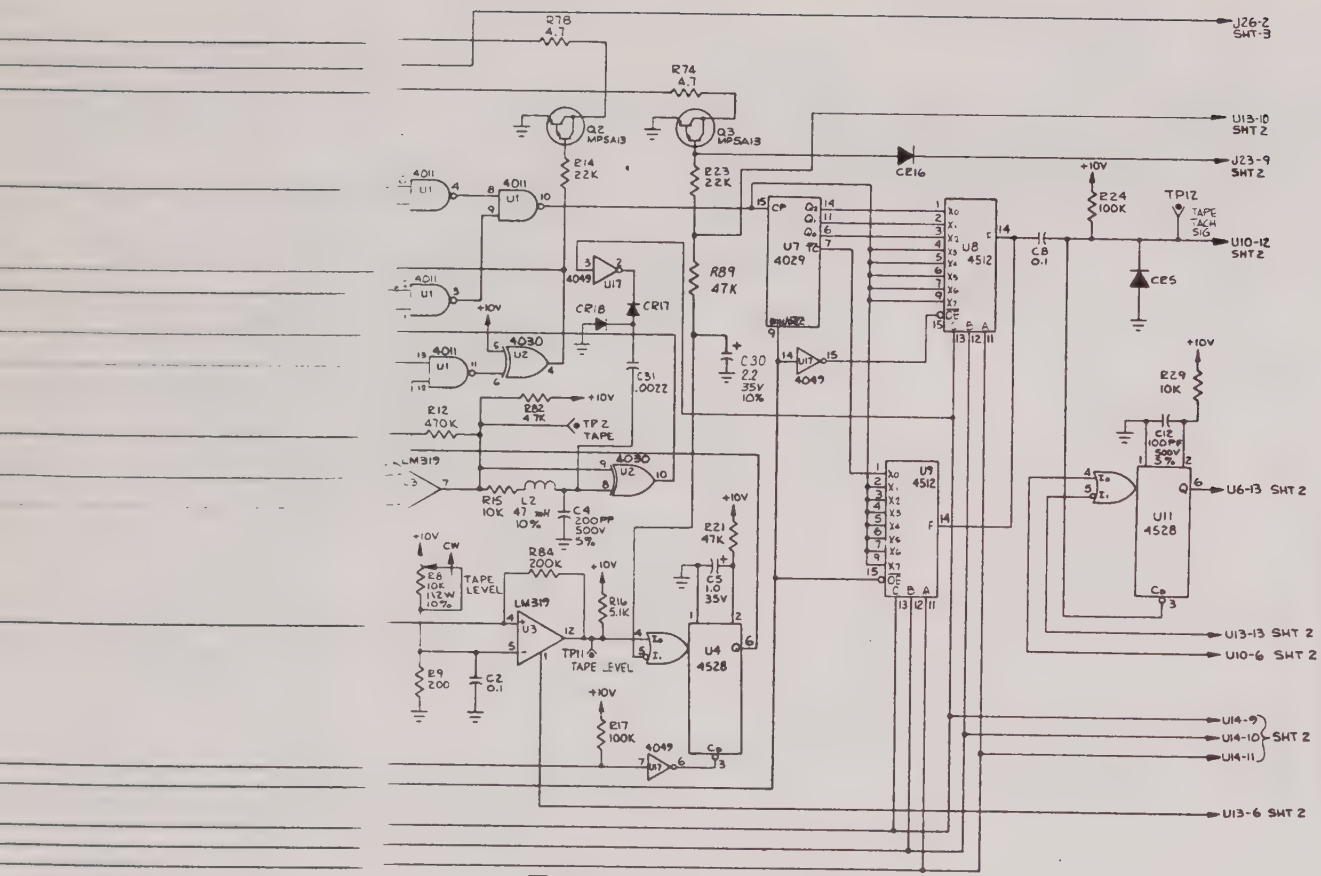

REFERENCE DESIGNATION	
LAST USED	NOT USED
CR18	
U20	
C31	
R89	
Q17	
TP12	
L2	
E6	

INTEGRATED CIRCUIT CONNECTIONS				
REF DES	SIG GND	+10V	-10V	NO CONNECTION
U1	7	14		
U2	7	14		
U3	3,8	11	6,14	
U4	8,16	16		7,9,10,12,14
U5		7	4	1,5,8
U6	4,5,6,7,8	14		3,9
U7	1,5,8	3,4,10,12,13,16		2
U8	8,10	16		
U9	8,10	16		
U10	8	16		7,9
U11	8	16		7,10
U12	5,11	1,4		
U13	7	2,14		3
U14	4,6,7,8	16		
U15		7	4	1,5,8
U16		7	4	1,5,8
U17	8,11	1		12,13,16
U18	1,2,7,8,11,12,13	14		9,10
U19	11	4		

(6) JUMPER E4 TO E5 FOR DECADE SPEEDS.
JUMPER E4 TO E6 FOR BINARY SPEEDS.

SPEED IPS		30	15	7½	3¾	1⅞	15/16	15/32	3.75	1.875	.375
SPEED LINE	A	0	1	0	1	0	1	0	0	1	0
	B	0	0	1	1	0	0	1	0	0	1
	C	0	0	0	0	1	1	1	0	0	0
BIN/DEC		1	1	1	1	1	1	1	0	0	0

= 5%.
...DS, 50V, 20%.
... = SPEEDS
SPEEDS.

FO-8 Schematic Diagram, Servo/MDA Module (Sheet 1 of 3)

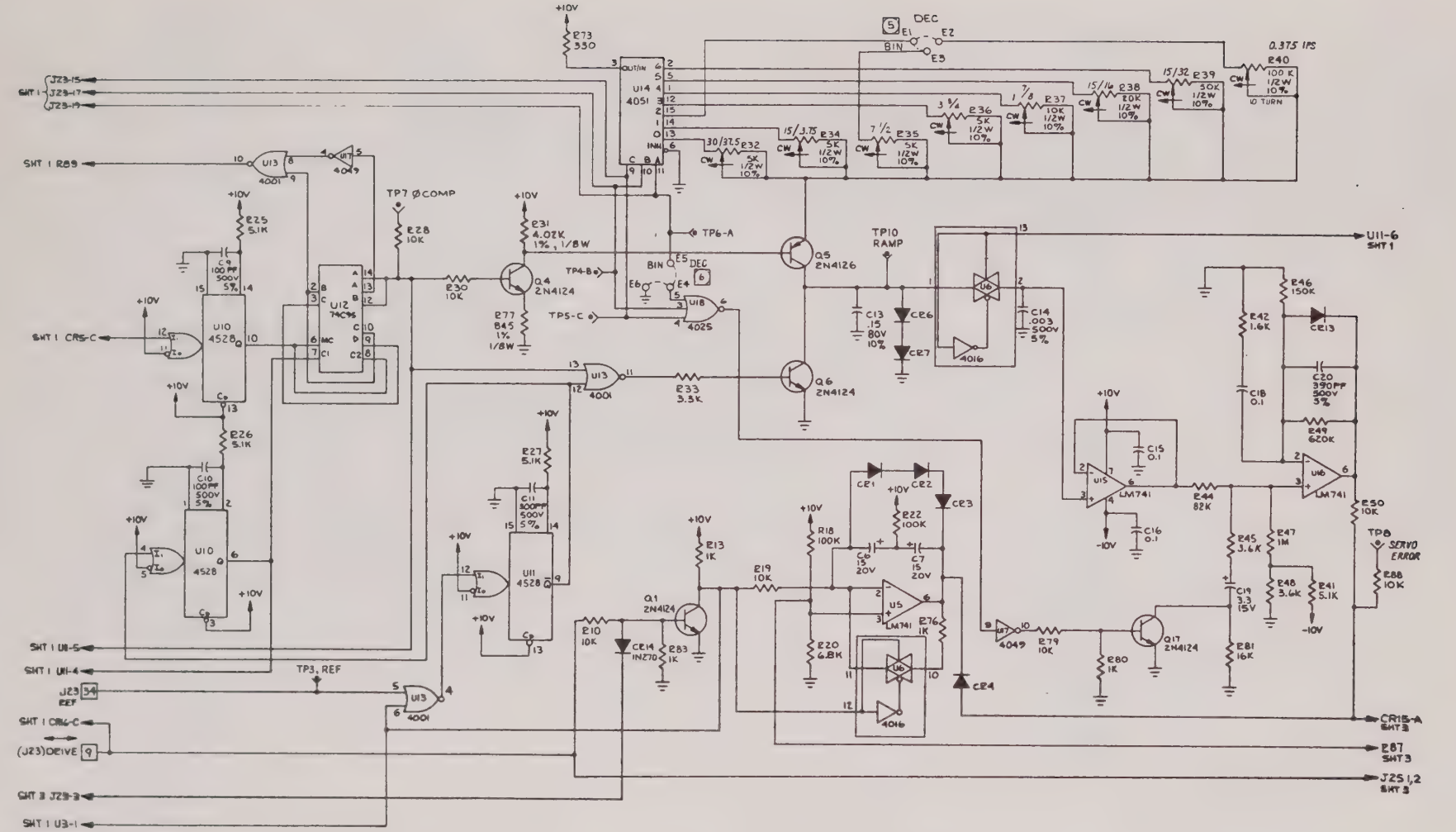

FO-8 Schematic Diagram, Servo/MDA Module (Sheet 2 of 3)

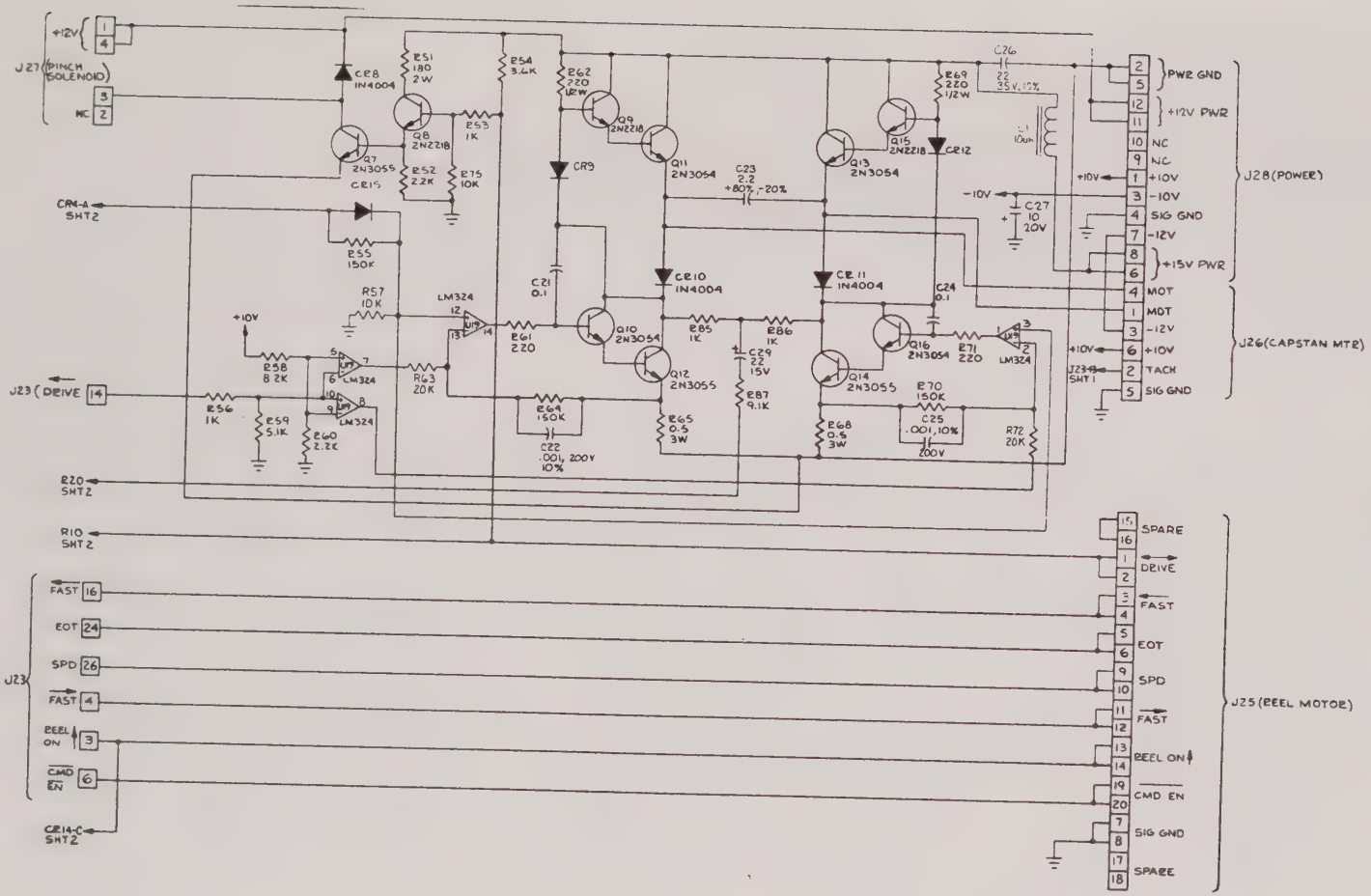

FO-8 Schematic Diagram, Servo/MDA Module (Sheet 3 of 3)

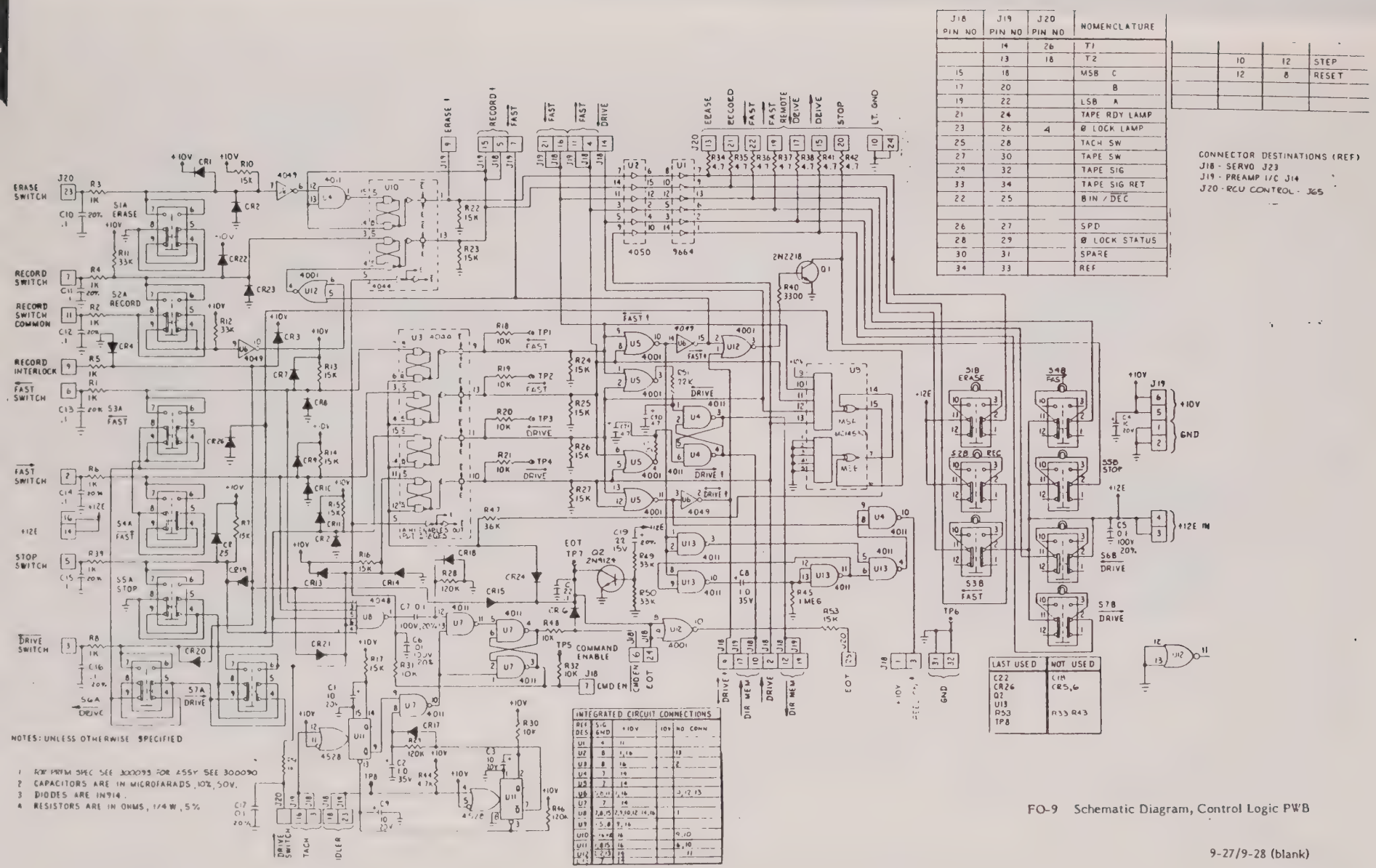

FO-9 Schematic Diagram, Control Logic PWB

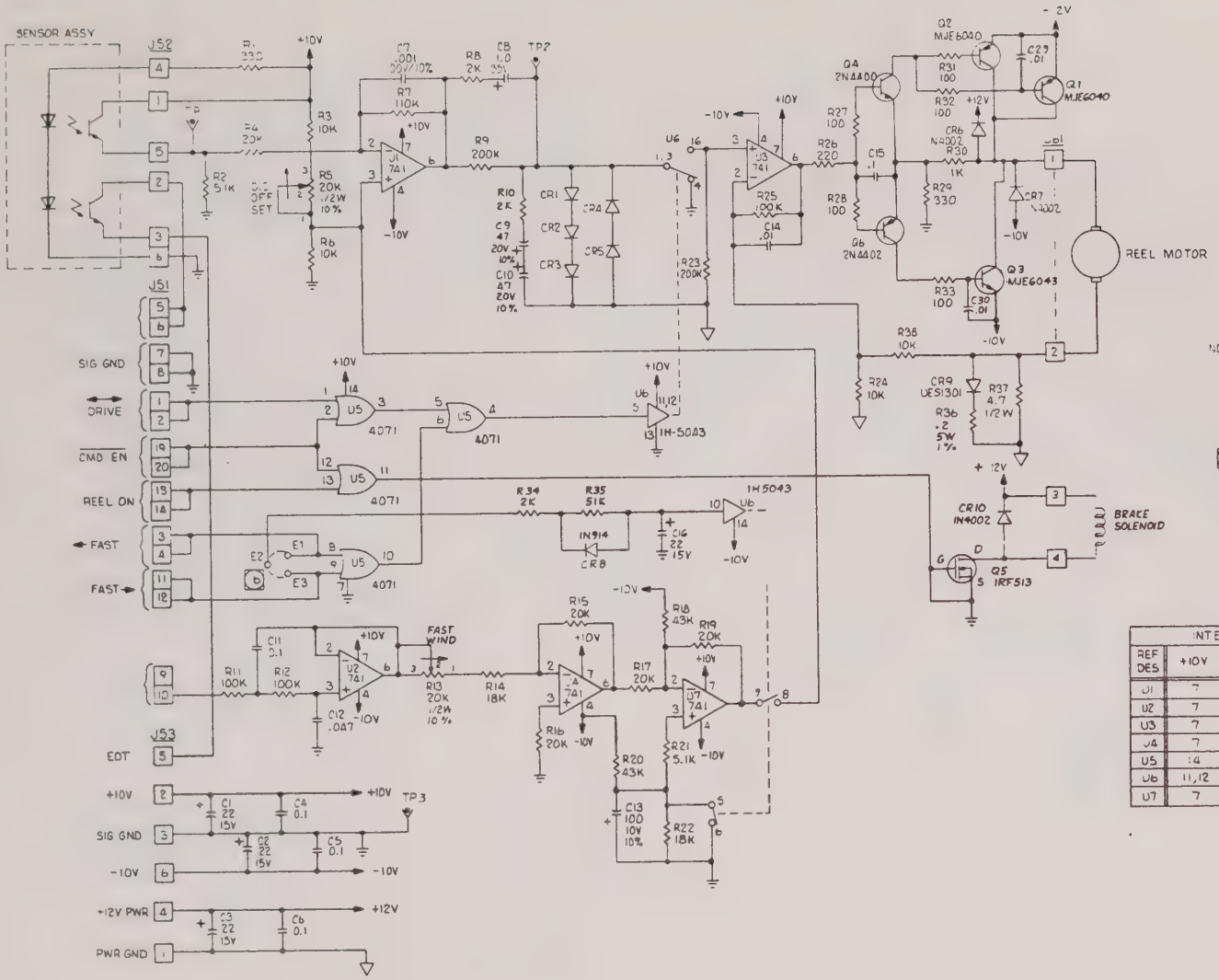

NOTES: UNLESS OTHERWISE SPECIFIED

1. FOR ASSY SEE 300095
   FOR PERM SPEC SEE 300096
2. RESISTORS ARE IN OHMS 1/4W 5%
3. CAPACITORS ARE IN MICROFARADS 50V, 20%
4. DIODES ARE IN914
5. JUMPER E2 TO E3 - SUPPLY REEL -01.
   JUMPER E1 TO E2 - TAKEUP REEL -02.

INTEGRATED CIRCUIT CONNECTIONS

REF DES	+10V	-10V	+10V DCPLG CAP	-10V DCPLG CAP	SIG GND	NOT USED	VALUE
U1	7	4	C17	C18	—	—	ALL ARE .1
U2	7	4	C19	C20	—	—	
U3	7	4	C25	C26	—	—	
U4	7	4	C21	C22	—	—	
U5	14	—	C27	—	7	—	
U6	11,12	14	C28		4,6,13	—	
U7	7	4	C23	C24	—	—	

FO-10 Schematic Diagram, Reel Amplifier PWB

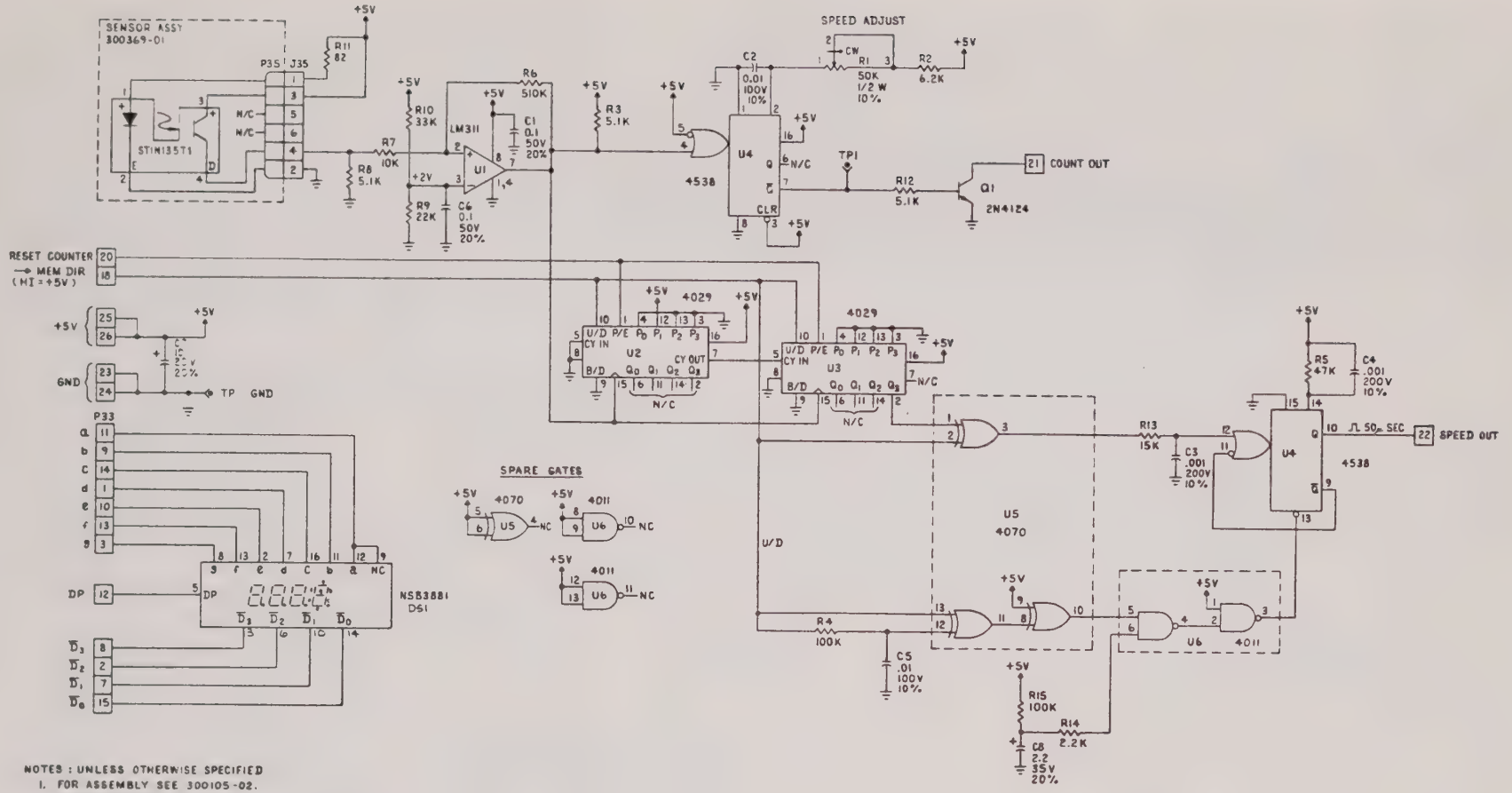

NOTES : UNLESS OTHERWISE SPECIFIED
1. FOR ASSEMBLY SEE 300105-02.
   FOR PRFM SPEC SEE 300108.
2. RESISTORS ARE IN OHMS .1/4W,5%.
3. CAPACITORS ARE IN MICROFARADS.

FO-11 Schedule Diagram, Footage Counter PWB

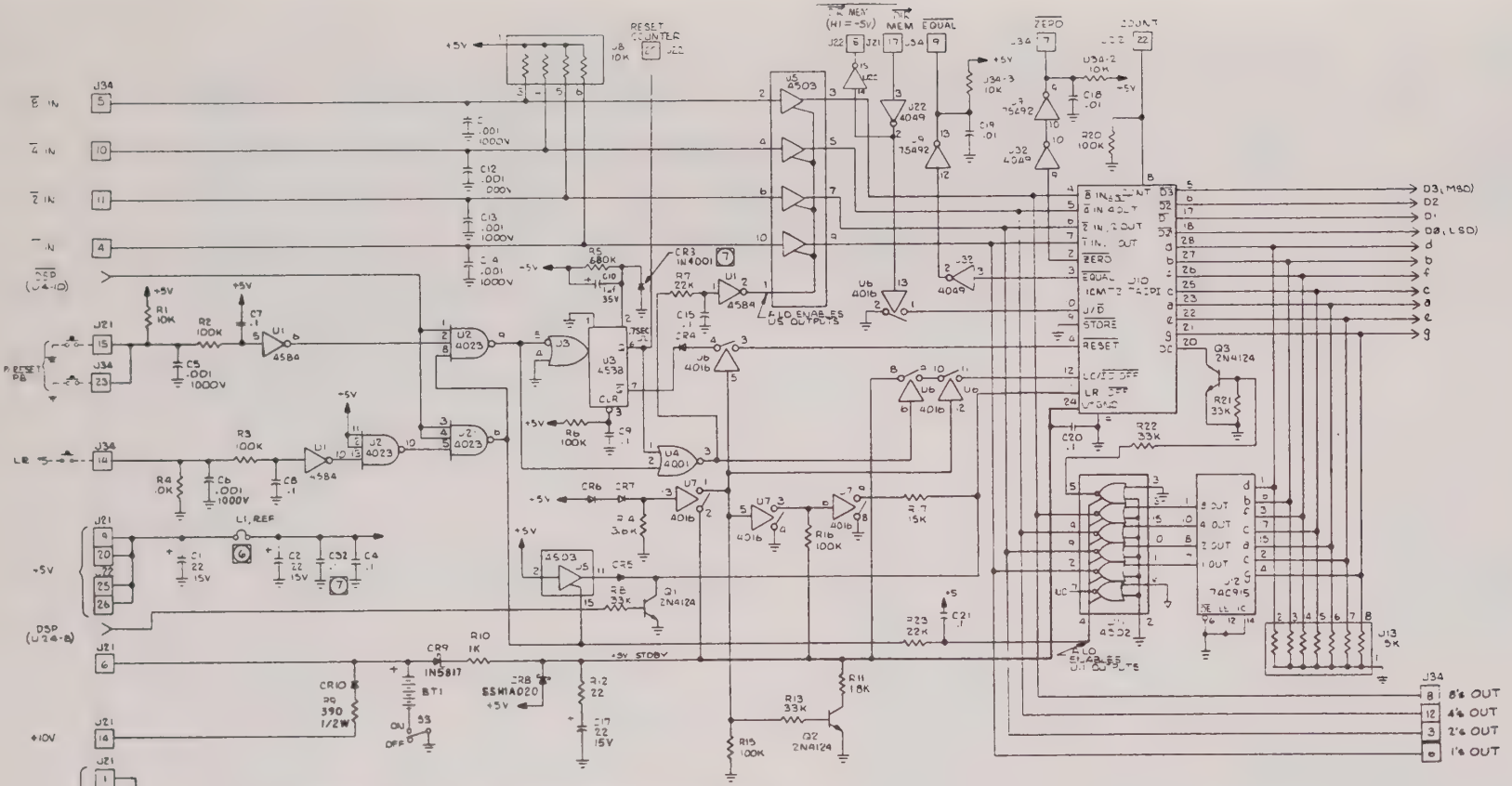

NOTES: UNLESS OTHERWISE SPECIFIED

1. FOR ASSY SEE P/L 300110-02 FOR PRFM SPEC SEE 300113.
2. ALL RESISTORS ARE IN OHMS, 1/4W, 5%.
3. ALL CAPACITORS ARE IN MICROFARADS, 50V, 20%.
4. ALL DIODES ARE IN914B.
5. SWITCHES S1 & S2 ARE SHOWN POSITIONED TO DISPLAY ENGLISH UNITS TO DISPLAY METRIC UNITS SWITCHES MARKED 'E' ARE OPEN AND SWITCHES 'M' ARE CLOSED. DO NOT RESET SWITCHES WITH POWER ON.
6. L1 NOT LOADED. INSTALL JUMPER IN SPACE PROVIDED FOR L1.
7. C32 AND CR3 ARE NOT LOADED.

INTERGRATED CIRCUIT PWR SPARE GATES & PIN CONN

DES	N.C.	GND	+5V	DES	N.C.	GND	+5V
U1	4,2	7	16,12,3	U22		8	14
U2		1,2	14	U23		4	14
U3		8	16	U21		7	14
U6	4	7,5,10	5	U22	4,12,13	3,5,11	
U5	15	8	16,14	U23	13	1,5	16,15
U8		7	4(1)	U24		12	4,1,3,5
U7		8,2,10,12	14 (1)	U25		12	4
U8	7,8	7	1	U26		7	14
U9		4	1	U27		8	6
U10	1,13	7	14 (1)	U28	3,9,11,14	8	16
U11	7	12	16	U29	6	8,7	14
U12	5,13	8	16	U30	11,10,9,15	8	16
U13		1		U31	7,5	8	16
U14	6	8,7,3	16	U32	13,16	8	1
U15		7	14	U33	4		1
U16	6,8	7	14	U35			
U17			1	U36	5,7,8		
U18	2,13	8	16,5				

(1) U6, U7, U10 — ARE POWERED FROM +5V STDBY, NOT SYSTEM +5

FO-12 Schematic Diagram; Display PWB (Sheet 1 of 2)

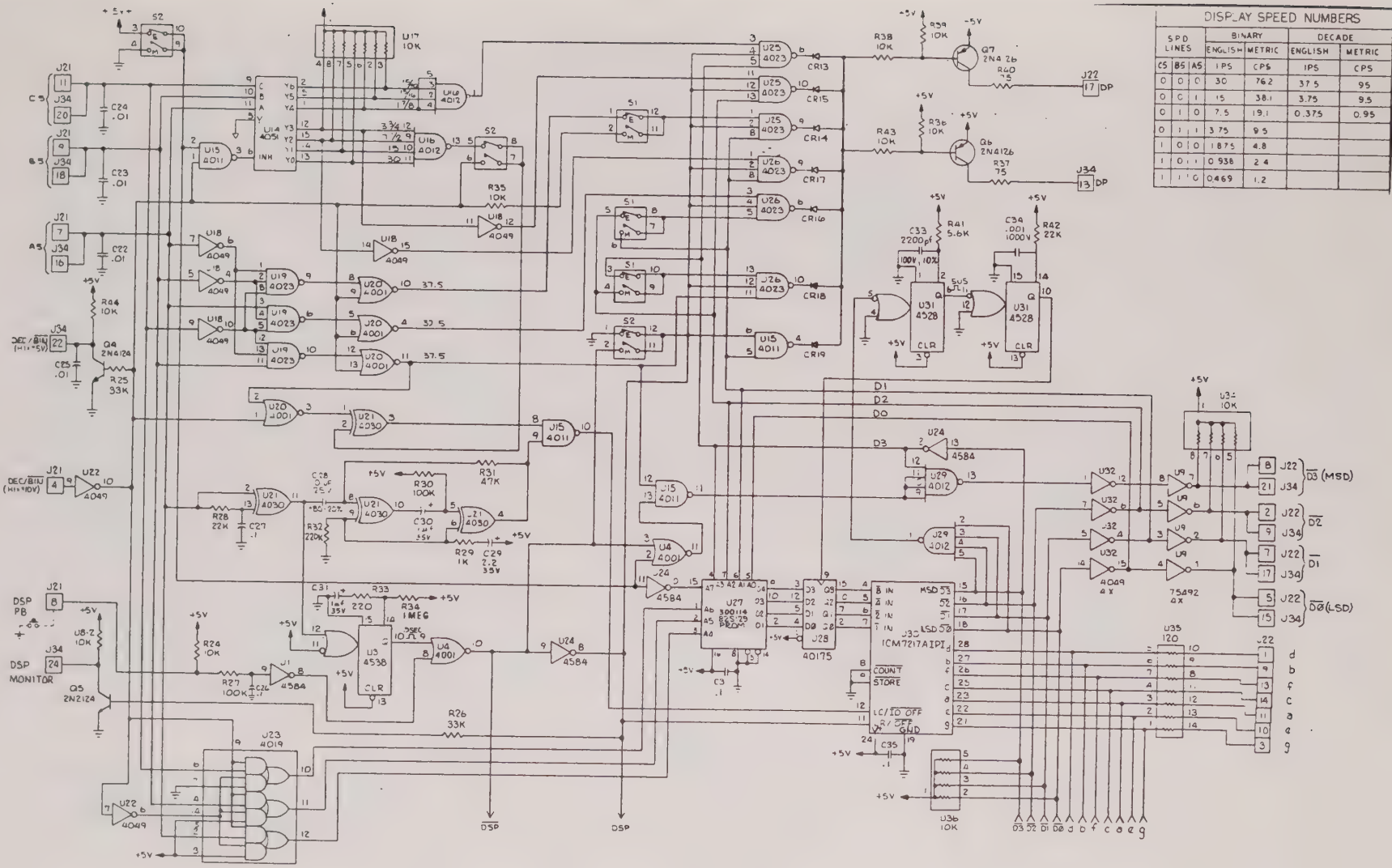

FO-12 Schedule Diagram, Display PWB (Sheet 2 of 2)

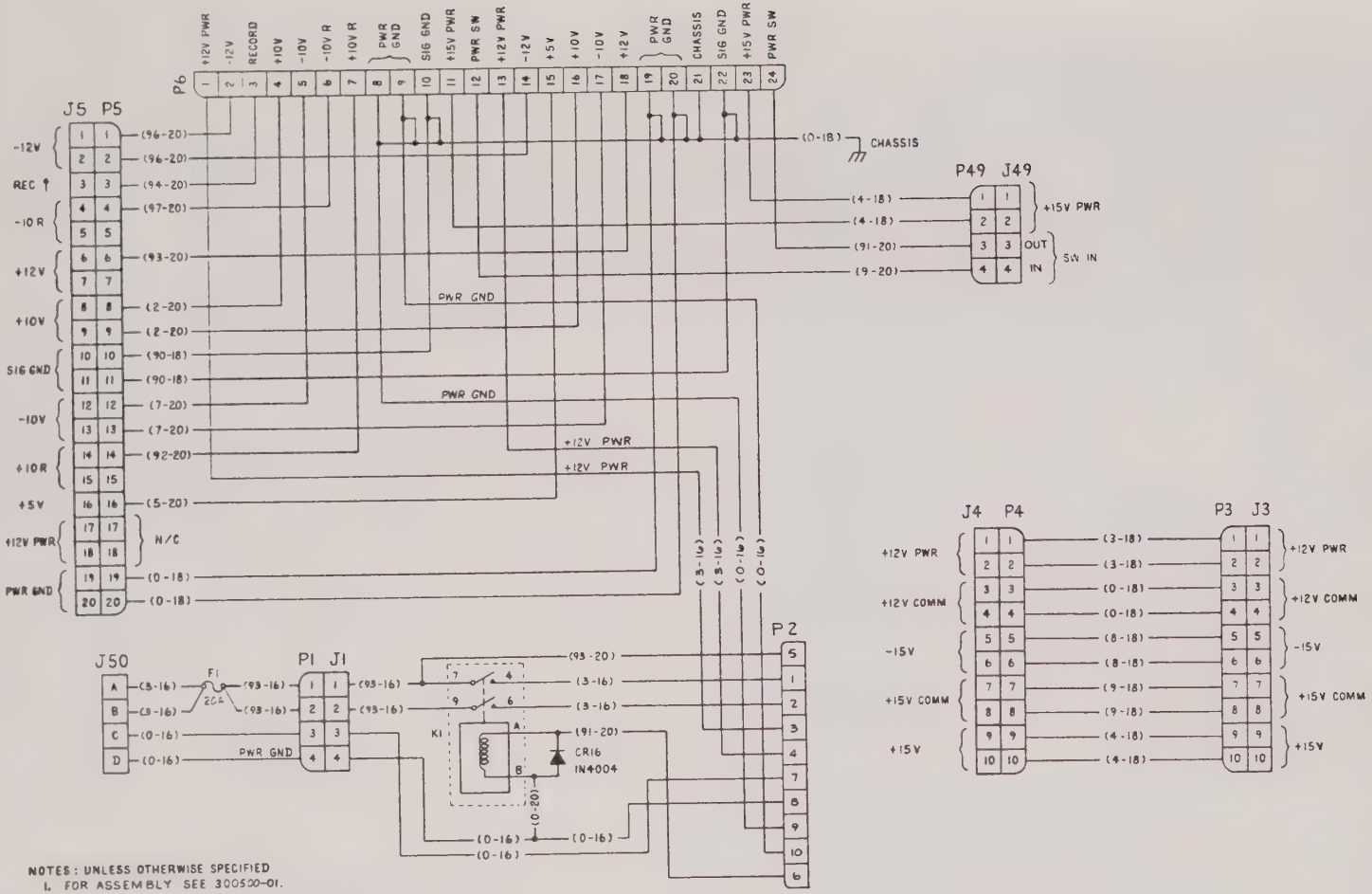

NOTES: UNLESS OTHERWISE SPECIFIED

1. FOR ASSEMBLY SEE 300500-01.
2. J1, K1, P2, P5, P6, P49 AND CR16 ARE PART OF CABLE ASSY 300343-01.
   P1, F1, AND J50 ARE PART OF CABLE ASSY 300344-01.
   P3 AND P4 ARE PART OF CABLE ASSY 300178-01.

FO-13 Schematic Diagram Interconnect Diagram, D.C. Switching, Power Supply

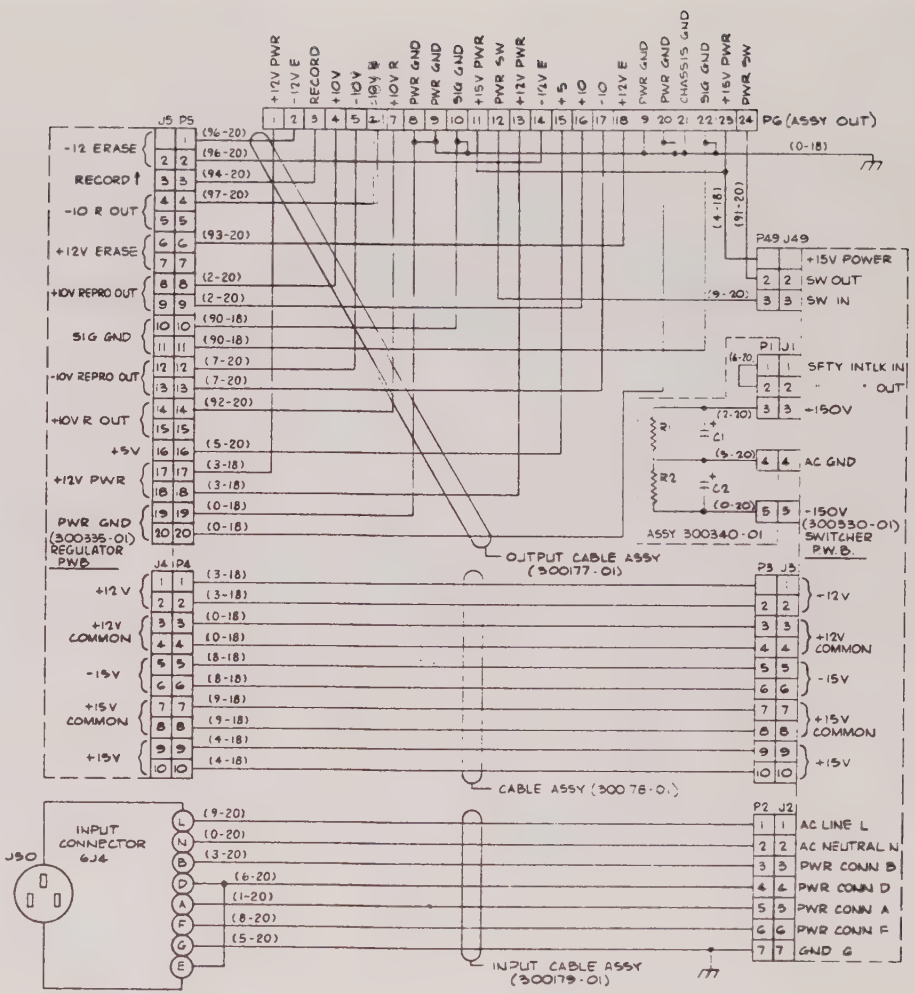

FO-14 Schematic Diagram, Interconnect Diagram, Power Supply

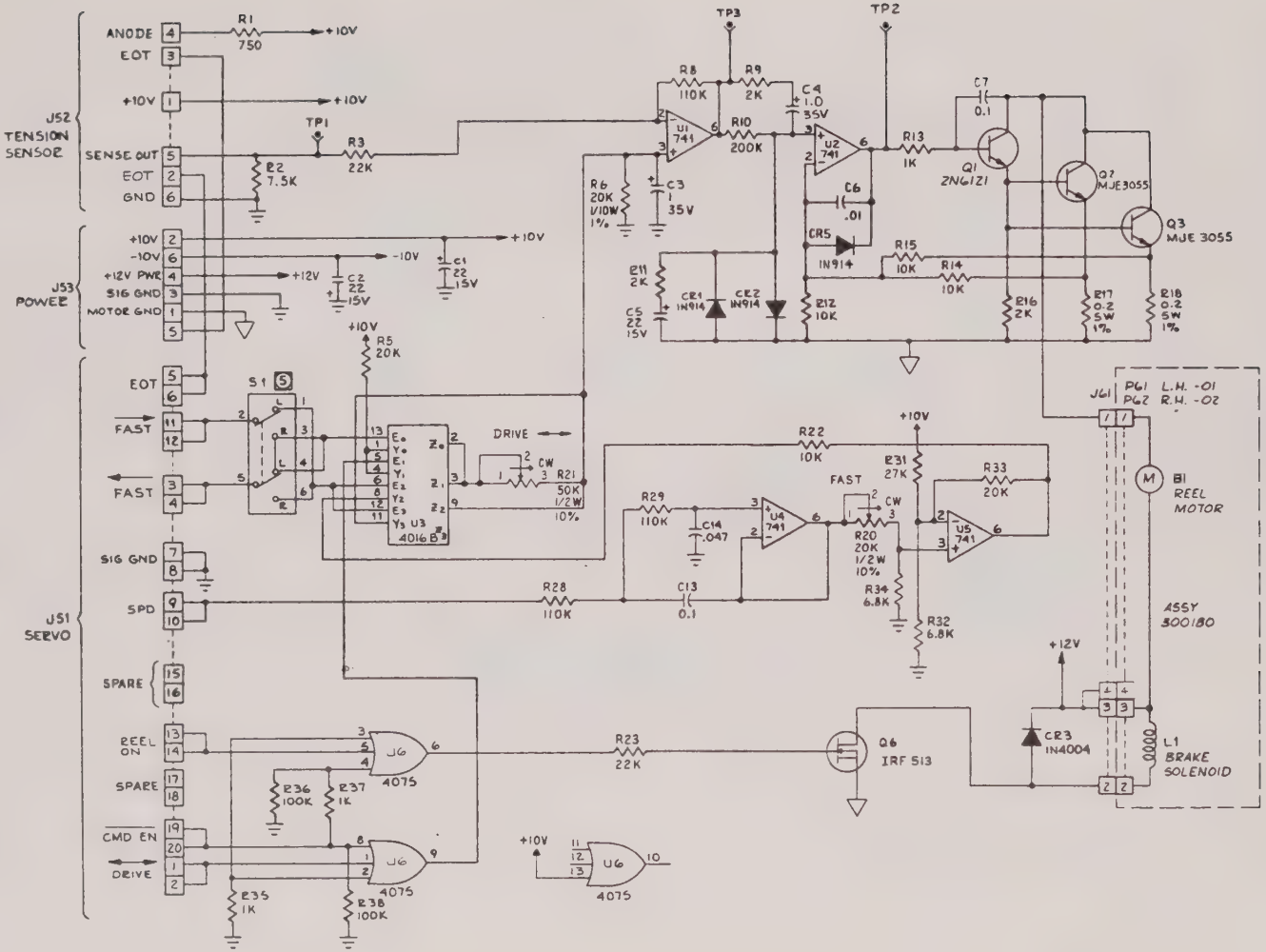

NOTES: UNLESS OTHERWISE SPECIFIED:

1. FOR ASSY SEE 300195(PWB ASSY) & 300180 (MOTOR ASSY). FOR PERM SPEC SEE 300181.
2. RESISTORS ARE IN OHMS, 1/4 W, 5%.
3. CAPACITORS ARE IN MICROFARADS, 50V, 20%. DECOUPLING CAPS ARE 0.1UF, 50V, 20%.

(5) SWITCH S1 SHOWN FOR LEFT HAND REEL ASSY. POSITION OF SWITCH SET AT ASSY 300020 OR 300025.

FO-15 Schematic Diagram, Reel Motor Assembly

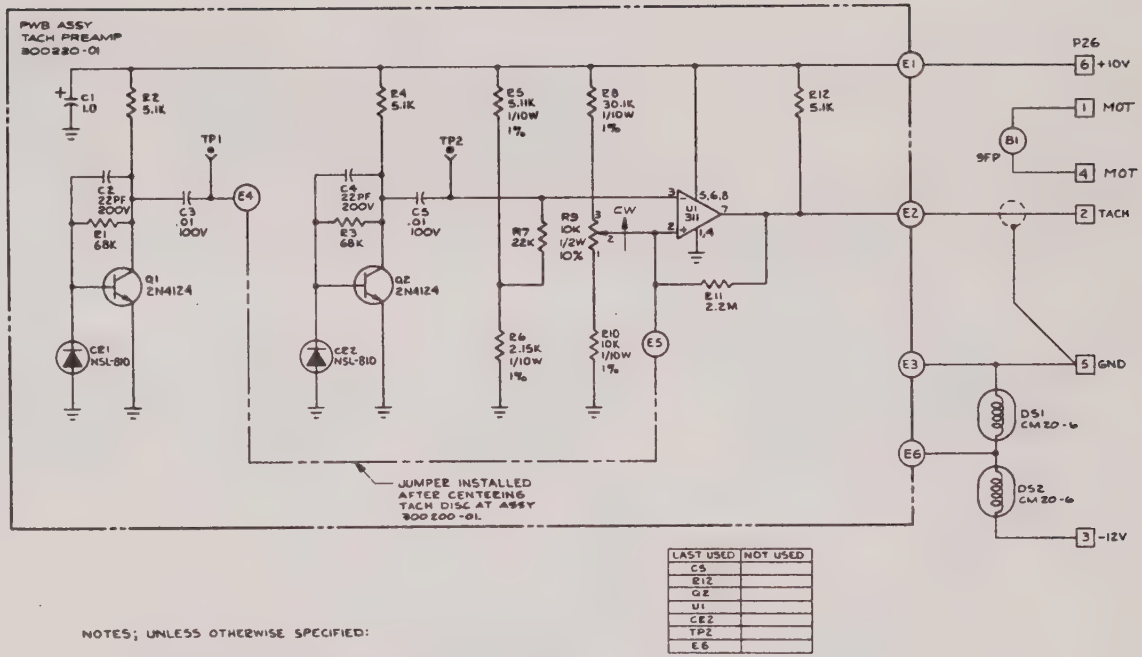

LAST USED	NOT USED
C5	
R12	
Q2	
U1	
CR2	
TP2	
E6	

NOTES; UNLESS OTHERWISE SPECIFIED:

1. RESISTORS ARE IN OHMS, 1/4W, 5%.
2. CAPACITORS ARE IN MICROFARADS, 50V, 10%.
3. FOR ASSY SEE 300200 AND 300220. FOR PERFM SPEC SEE 300223.

FO-16 Schematic Diagram, Capstan Motor/Tach Preamp

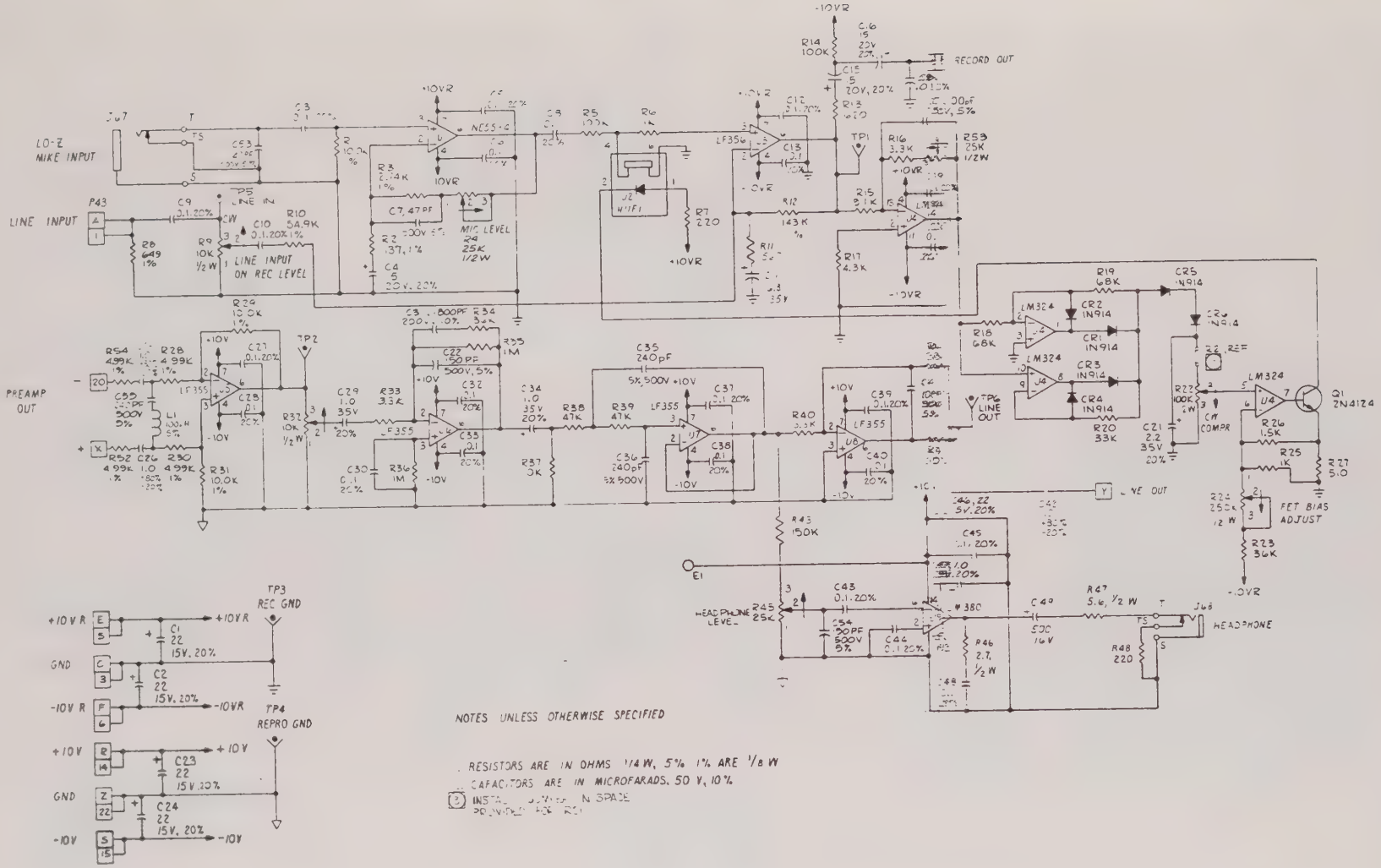

FO-17 Schematic Diagram, Audio Module

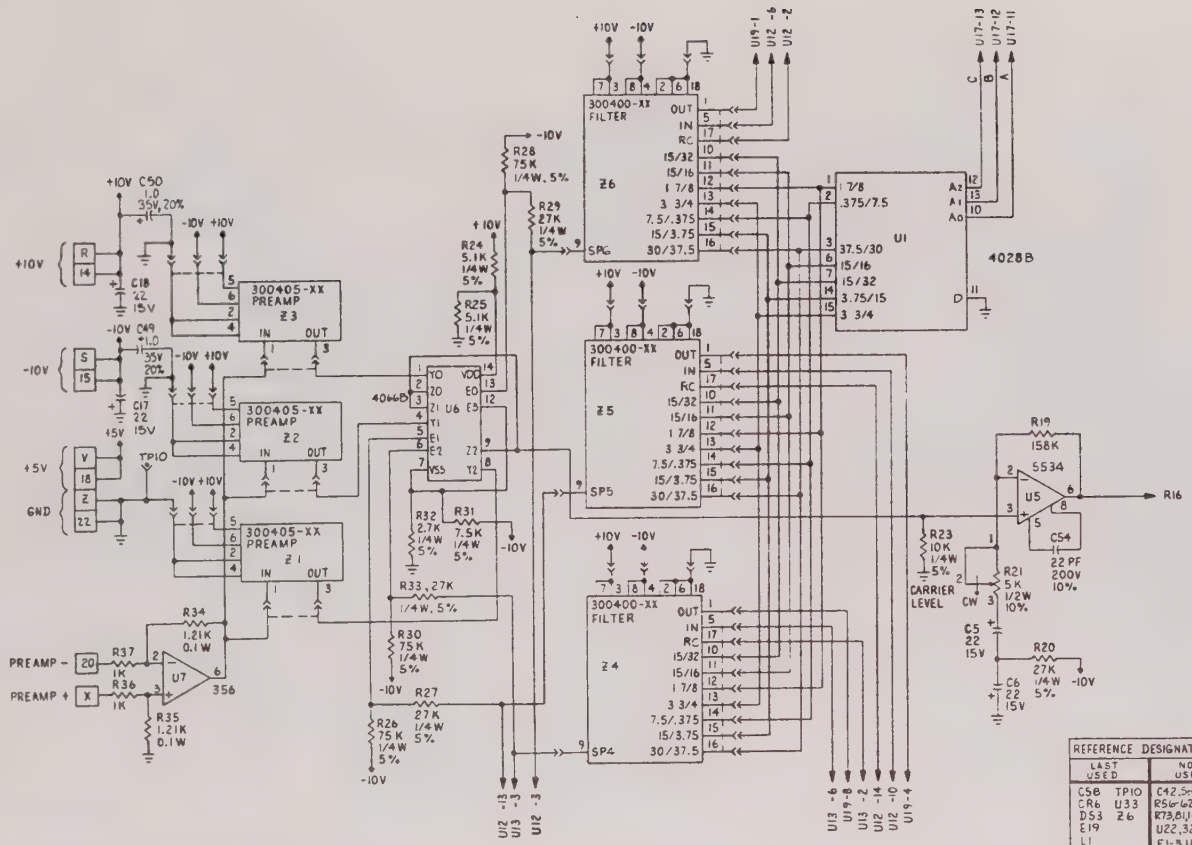

NOTES: UNLESS OTHERWISE SPECIFIED

1. CAPACITORS ARE IN MICROFARADS, 50V, 20%
2. RESISTORS ARE IN OHMS, 1/8 W, 1%.
3. FOR ASSY SEE 300250-03.
   FOR PRFM SPEC SEE 300252.

(A) JUMPER SHOWN IN NORMAL POSITION FOR NO FLUTTER COMPENSATION.

B/D	A2	A1	A0	SPEED (IPS)
1	0	0	0	30
1	0	0	1	15
1	0	1	0	7 1/2
1	0	1	1	3 3/4
1	1	0	0	1 7/8
1	1	0	1	15/16
1	1	1	0	15/32
0	0	0	0	37.5
0	0	0	1	3.75
0	0	1	0	.375

REFERENCE DESIGNATIONS

LAST USED	NOT USED
C58 TP10 CR6 U33 D53 Z6 E19 L1 Q2 R123 S4	C42,50,57 R56-62,64-70, R73,81,113,116 U22,32 E1-3,11 S3

INTEGRATED CIRCUIT CONNECTIONS

REF DES	SIG GND	+10V	-10V	+10V DCPLG CAP	-10V DCPLG CAP	NO CONN	VALUE
U1	8	16				4,5,9	
U2		8	4	C2	C1	5,6	
U3		7	4			1,5,8	
U4	1	8	4			5,6	
U5		7	4	C8	C7	1	
U6						10,11	
U7		7	4	C9	C10	1,5,8	
U8		8	4	C11	C14		
U9	7	14					
U10	3,5,7,11,13	14				4,6,10,12	
U11	7	14					
U12	1,8,15	16		C51			
U13	1,8,15	16		C53		10	
U14	7	14					
U15	7	14					
U16	7	14				11	0.1
U17	4-10	16					
U18	8-10	16					
U19	7	14					
U20	5,8	10,13,14				2,7	
U21	5,8	10,13,14				2,7	
U22							
U23	1	8	4			5,6	
U24	1	8	4			5,6	
U25	2,7	14				3-6,8-10,13	
U26	2,7	14				3-6,8-11,13	
U27		7	4	C34	C35	1,5,8	
U28		7	4	C36	C37	8	
U29		7	4	C38	C28	1,5,8	
U30		7	4	C39	C29	1,5,8	
U31				C41	C30	2,3,6,8,9	
U32							
U33				C49	C32	1,5,8	

FO-18 Schematic Diagram, FM Record/Reproduce Module (Sheet 1 of 3)

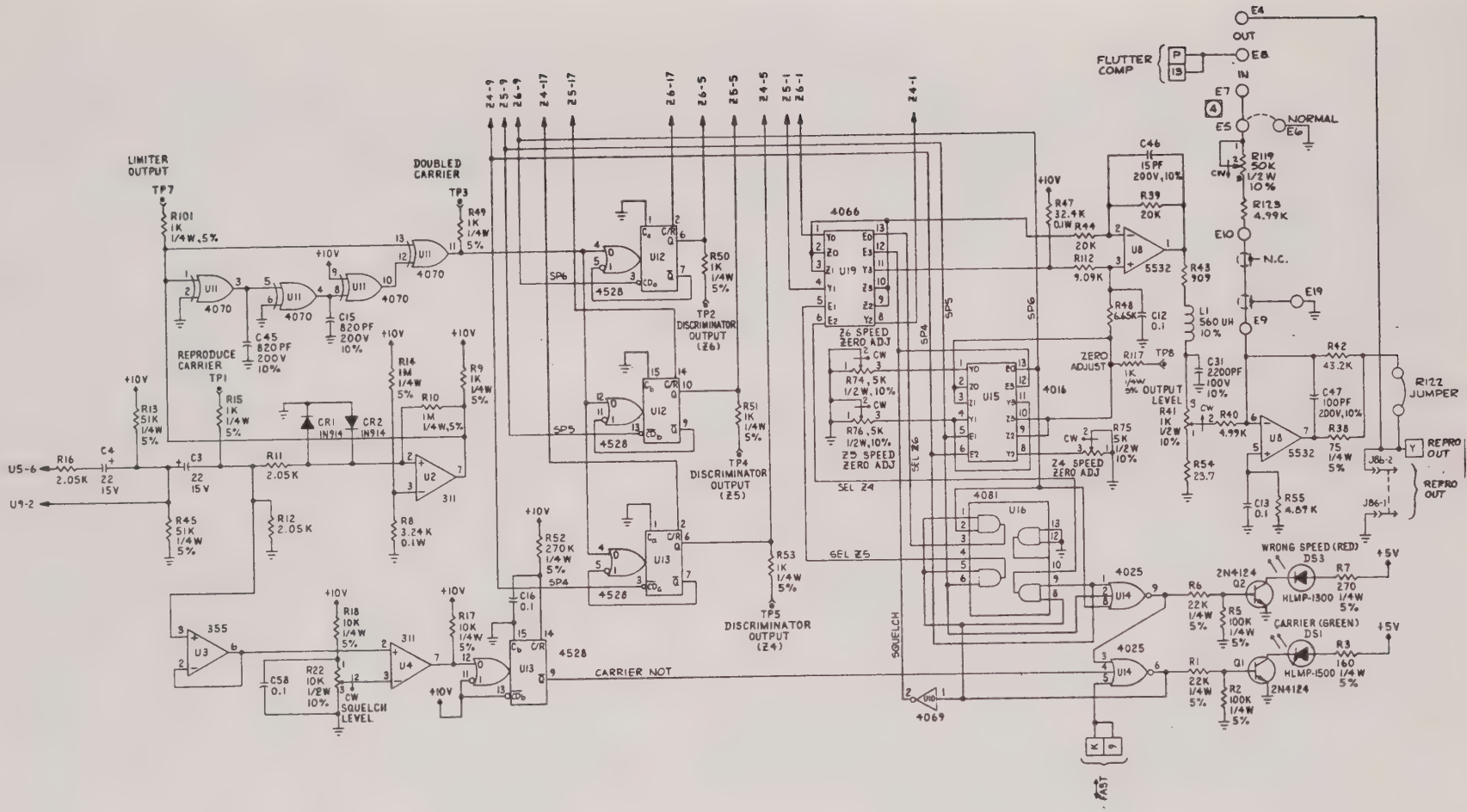

FO-18 Schematic Diagram, FM Record/Reproduce Module (Sheet 2 of 3)

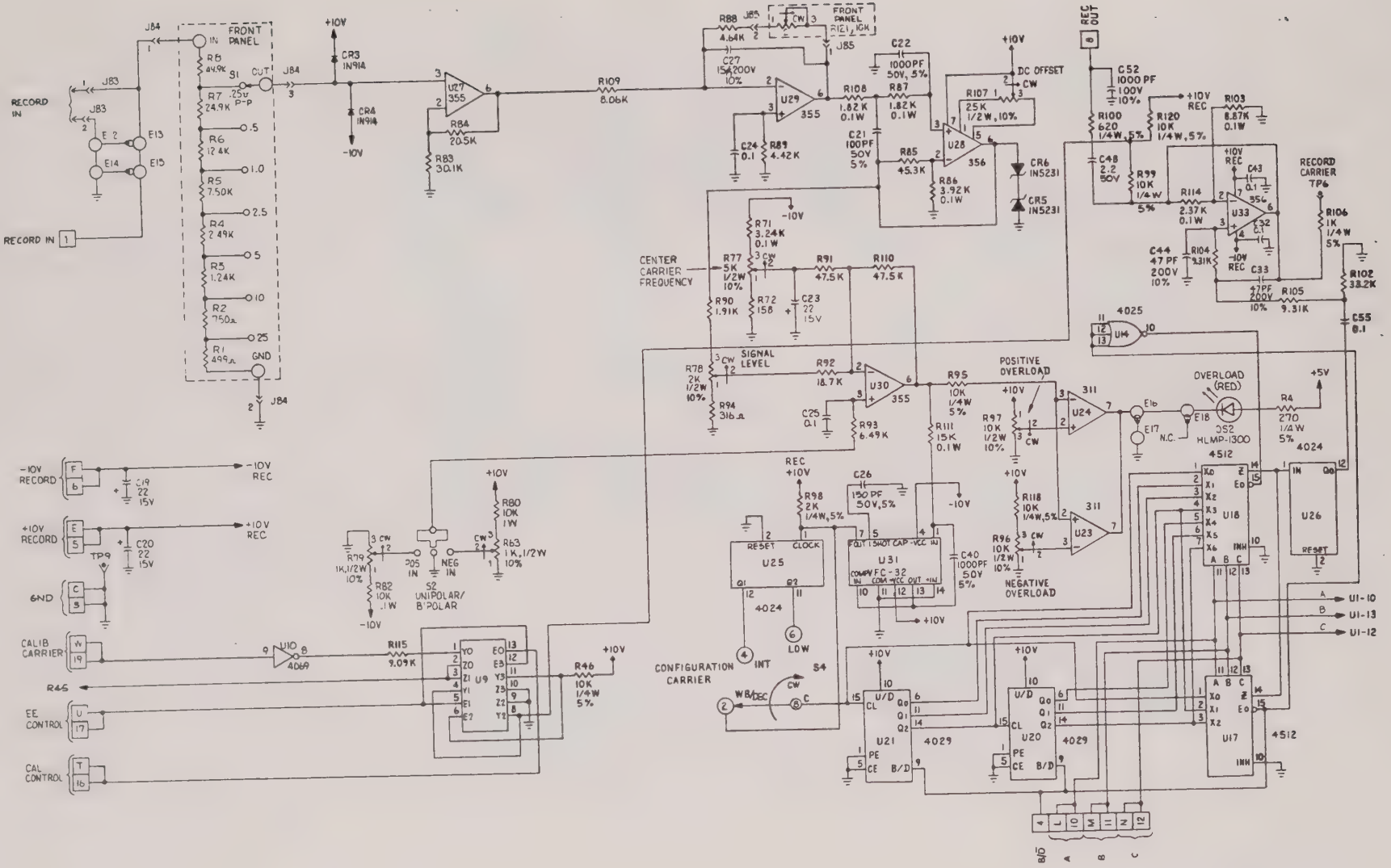

FO-18 Schematic Diagram, FM Record/Reproduce Moduel (Sheet 3 of 3)

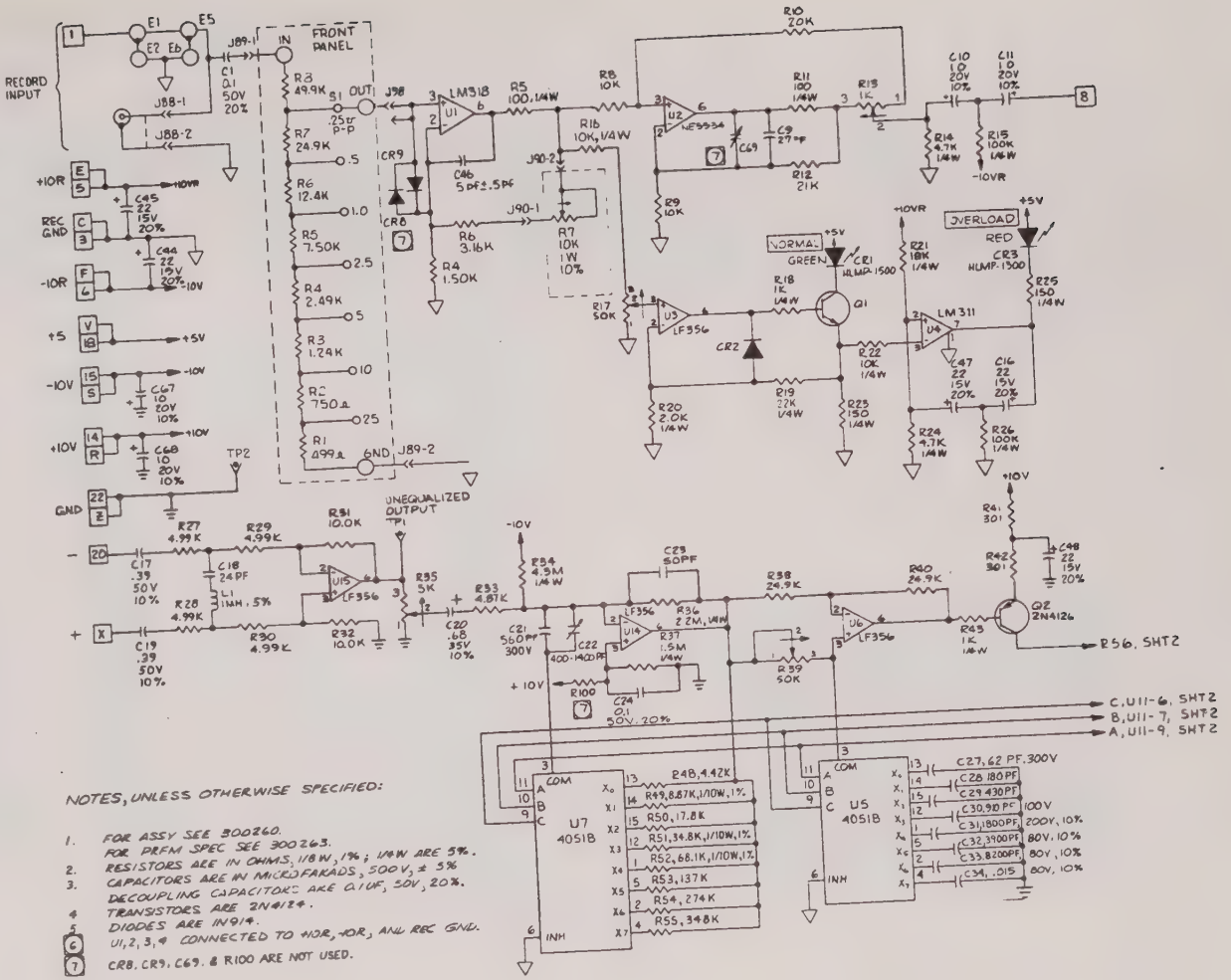

FO-19 Schematic Diagram, Direct Module (Sheet 1 of 2)

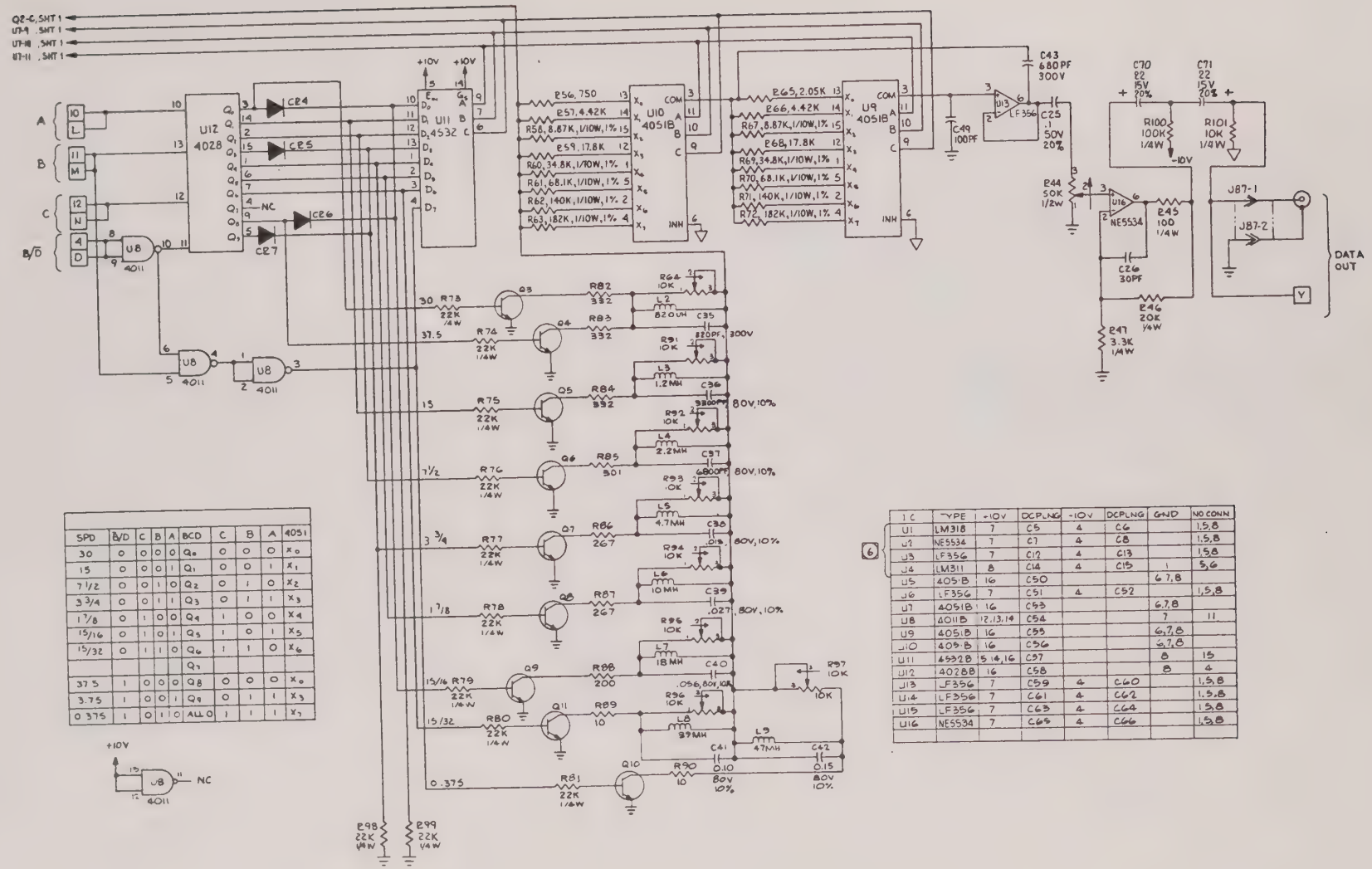

SPD	B/D	C	B	A	BCD	C	B	A	4051
30	0	0	0	0	Q_0	0	0	0	X_0
15	0	0	0	1	Q_1	0	0	1	X_1
7 1/2	0	0	1	0	Q_2	0	1	0	X_2
3 3/4	0	0	1	1	Q_3	0	1	1	X_3
1 7/8	0	1	0	0	Q_4	1	0	0	X_4
15/16	0	1	0	1	Q_5	1	0	1	X_5
15/32	0	1	1	0	Q_6	1	1	0	X_6
					Q_7				
37 5	1	0	0	0	Q_8	0	0	0	X_0
3.75	1	0	0	1	Q_9	0	0	1	X_3
0 375	1	0	1	0	ALL 0	1	1	1	X_7

I C	TYPE	+10V	DCPLNG	-10V	DCPLNG	GND	NO CONN
U1	LM318	7	C5	4	C6		1,5,8
U2	NE5534	7	C7	4	C8		1,5,8
U3	LF356	7	C12	4	C13		1,5,8
U4	LM311	8	C14	4	C15	1	5,6
U5	4051B	16	C50			6,7,8	
U6	LF356	7	C51	4	C52		1,5,8
U7	4051B	16	C53			6,7,8	
U8	4011B	12,13,14	C54			7	11
U9	4051B	16	C55			6,7,8	
U10	4051B	16	C56			6,7,8	
U11	4532B	5,14,16	C57			8	15
U12	4028B	16	C58			8	4
U13	LF356	7	C59	4	C60		1,5,8
U14	LF356	7	C61	4	C62		1,5,8
U15	LF356	7	C63	4	C64		1,5,8
U16	NE5534	7	C65	4	C66		1,5,8

FO-19 Schematic Diagram, Direct Module (Sheet 2 of 2)

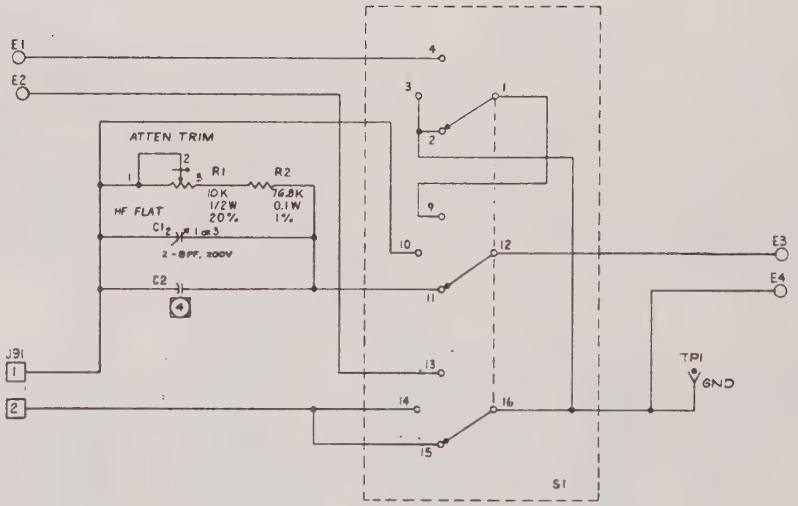

NOTES : UNLESS OTHERWISE SPECIFIED

1. FOR ASSEMBLY SEE 300290.
2. RESISTORS ARE IN OHMS.
3. CAPACITORS ARE IN MICROFARADS.
4. C2 IS NOT LOADED.

FO-20 Schematic Diagram, Calibrator Attenuator

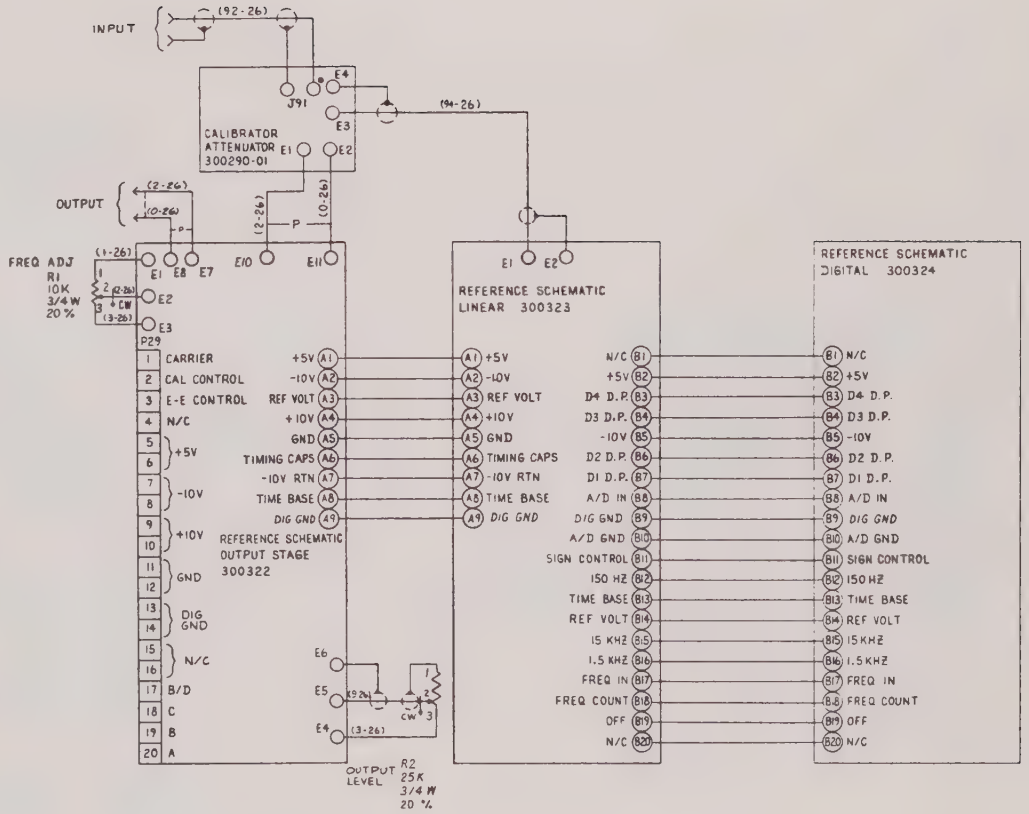

NOTES: UNLESS OTHERWISE SPECIFIED

1. FOR ASSEMBLY SEE 300310.
   FOR PRFM SPEC SEE 300312.
2. RESISTORS ARE IN OHMS.

FO-21 Interconnect Diagram, Calibrator Module

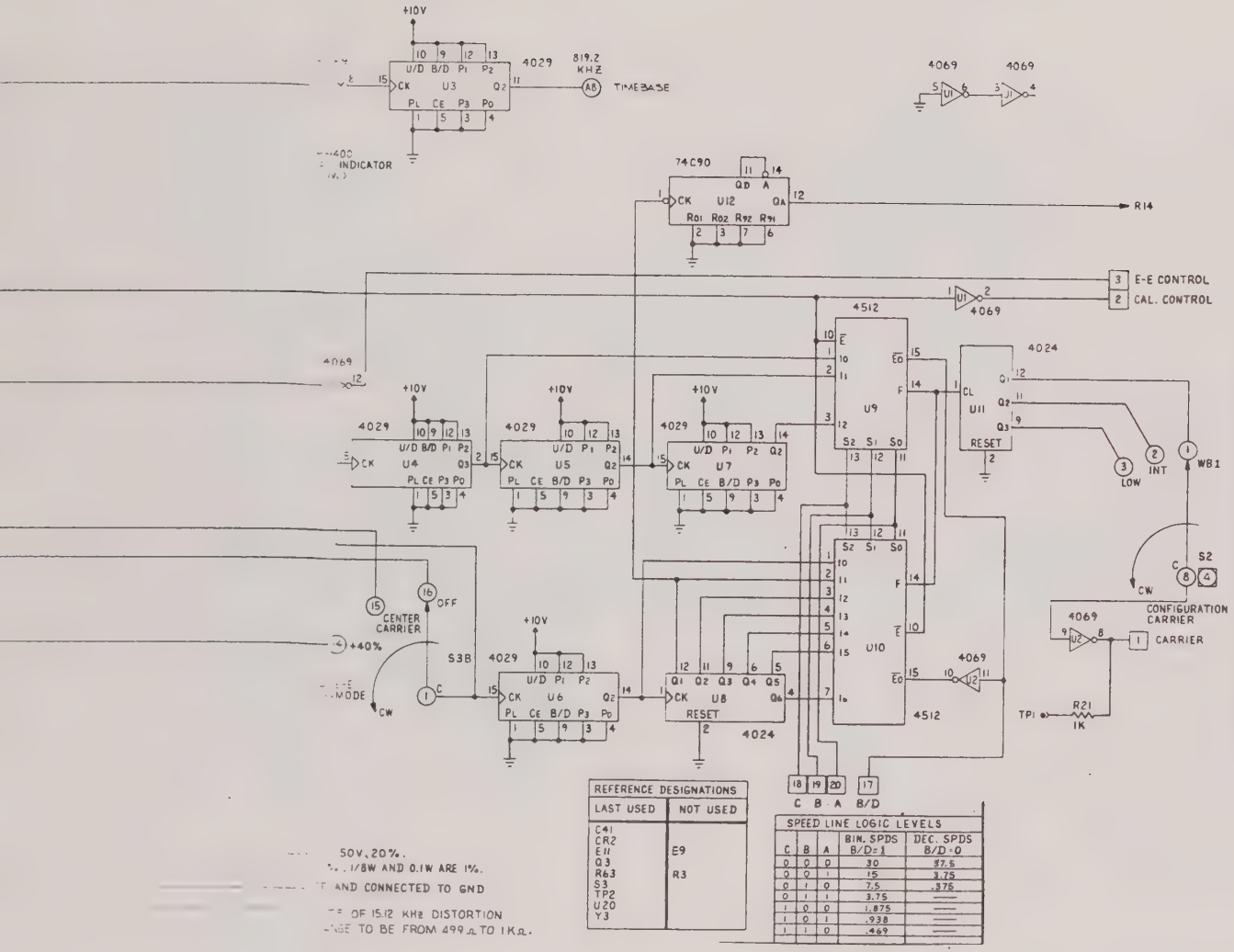

REFERENCE DESIGNATIONS	
LAST USED	NOT USED
C41	
CR2	
E11	E9
Q3	
R63	R3
S3	
TP2	
U20	
Y3	

SPEED LINE LOGIC LEVELS				
C	B	A	BIN. SPDS B/D=1	DEC. SPDS B/D=0
0	0	0	30	37.5
0	0	1	15	3.75
0	1	0	7.5	.375
0	1	1	3.75	—
1	0	0	1.875	—
1	0	1	.938	—
1	1	0	.469	—

INTEGRATED CIRCUIT CONNECTIONS								
REF DES	SIG GND	+10V	-10V	+5V DCPLG CAP	+10V DCPLG CAP	-10V DCPLG CAP	NO CONN	VALUE
U1	7	14					4	
U2	7	14						
U3	8	16					2,6,7,14	
U4	8	16					6,7,11,14	
U5	8	16					2,6,7,11	
U6	8	16					2,6,7,11	
U7	8	16					2,6,7,11	
U8	7	14					3,8,10,13	
U9	8	16					4-7,9	
U10	8	16					9	0.1
U11	7	14					3-6,8,10,13	
U12	10	5					4,8,9,13	
U13		6	11				7,8,13,14	
U14		7	4		C28	C29	1,5,8	
U15			4	C33		C35	5	
U16		7	4		C10	C9	1,5,8	
U17		7	4		C13	C14	1,5,8	
U18		7	4		C18	C17	1,5,8	
U19		7	4		C23	C25	1,5,8	
U20		7	4		C20	C21	1,5,8	

FO-22 Schematic Diagram, Output Stage Calibrator (Sheet 1 of 2)

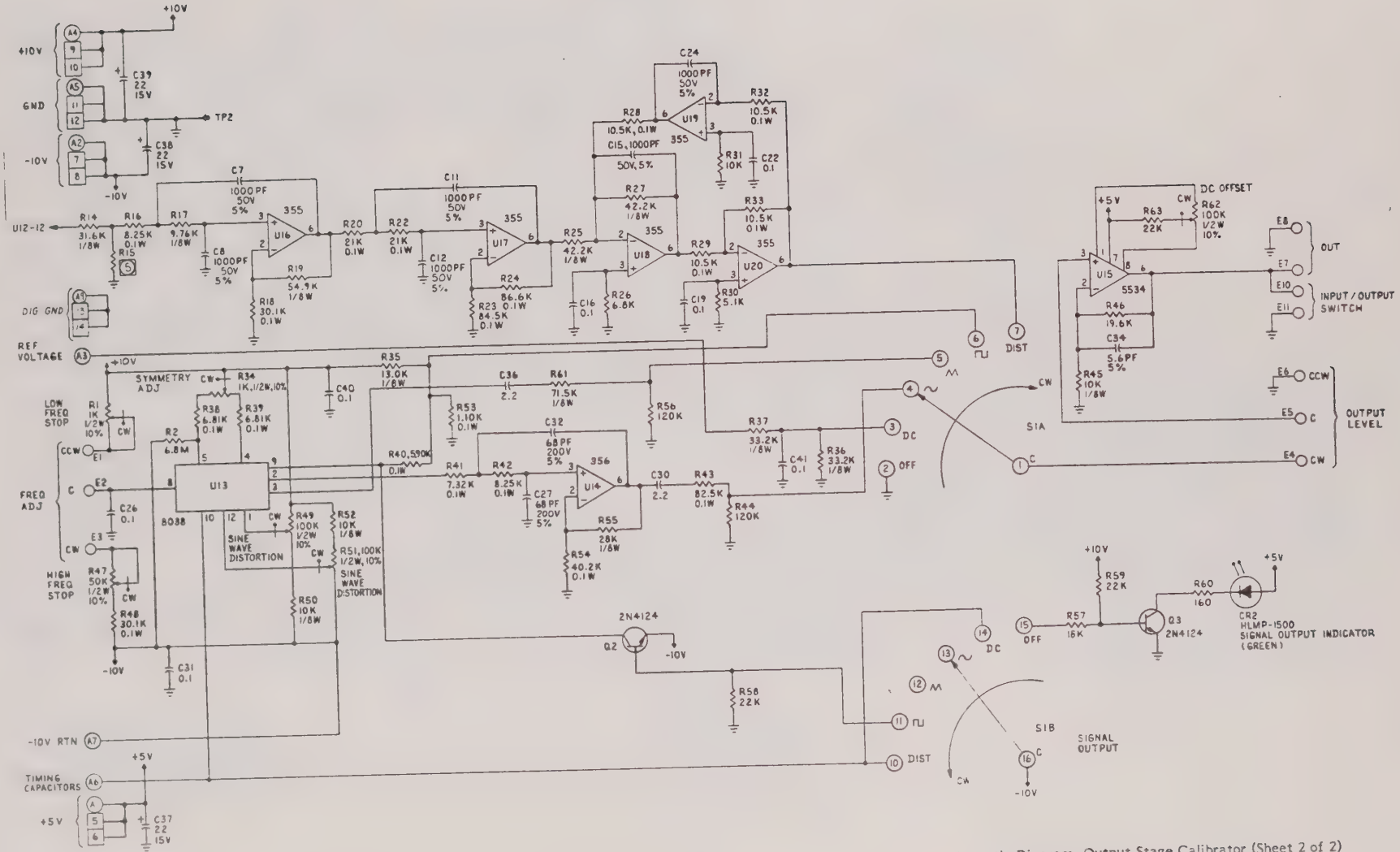

FO-22 Schematic Diagram, Output Stage Calibrator (Sheet 2 of 2)

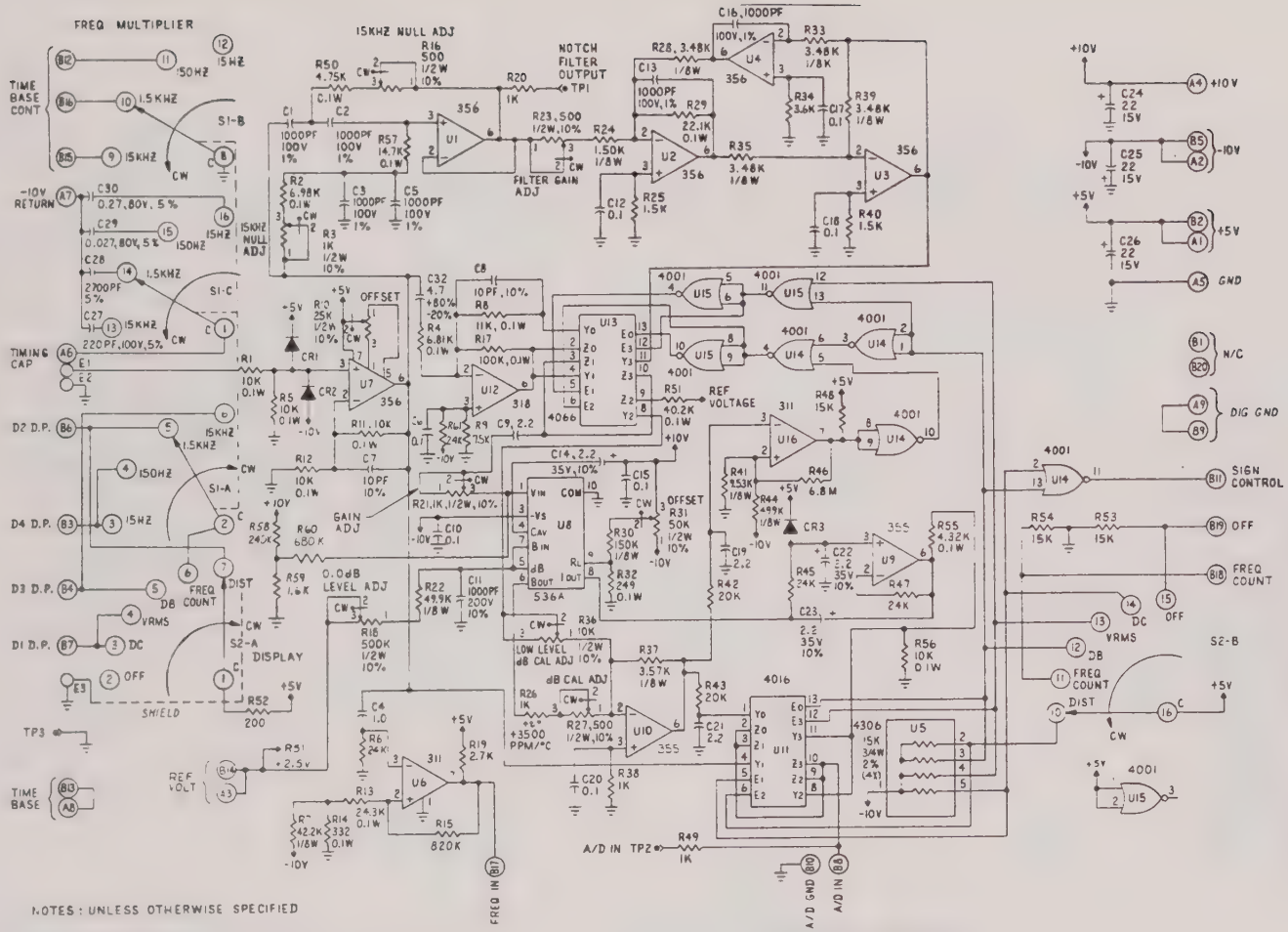

INTEGRATED CIRCUIT CONNECTIONS							
REF DES	+5V	-10V	+10V	+5V DCPLG CAP	-10V DCPLG CAP	NO CONN	VALUE
U1	7	4		C33	C34	1,5,8	
U2	7	4		C35	C36	1,5,8	
U3	7	4		C37	C38	1,5,8	
U4	7	4		C39	C40	1,5,8	
U5						6,7	
U6	8	4		C31	C49	5,6	
U7		4		C41	C42	8	
U8		3	14		C10	2,11-13	0.1
U9	7	4		C43	C44	1,5,8	
U10	7	4		C45	C46	1,5,8	
U11	14	7					
U12	7	4		C47	C48	1,5,8	
U13	14	7					
U14	14	7					
U15	14	7				3	
U16	8	1,4				5,6	

NOTES: UNLESS OTHERWISE SPECIFIED

1. THE BASIC ASSY NO. IS 300317-01.
2. FOR PRFM SPEC SEE 300312.
3. CAPACITORS ARE IN MICROFARADS, 50V, 20%.
4. RESISTORS ARE IN OHMS, 1/4W, 5%. 1/8W & 0.1W ARE 1%.
5. DIODES ARE TYPE IN914.

REFERENCE DESIGNATION	
LAST USED	NOT USED
C49	
CR3	
E3	
R61	
S2	
TP3	
U16	

FO-23 Schematic Diagram, Linear Input, Calibrator

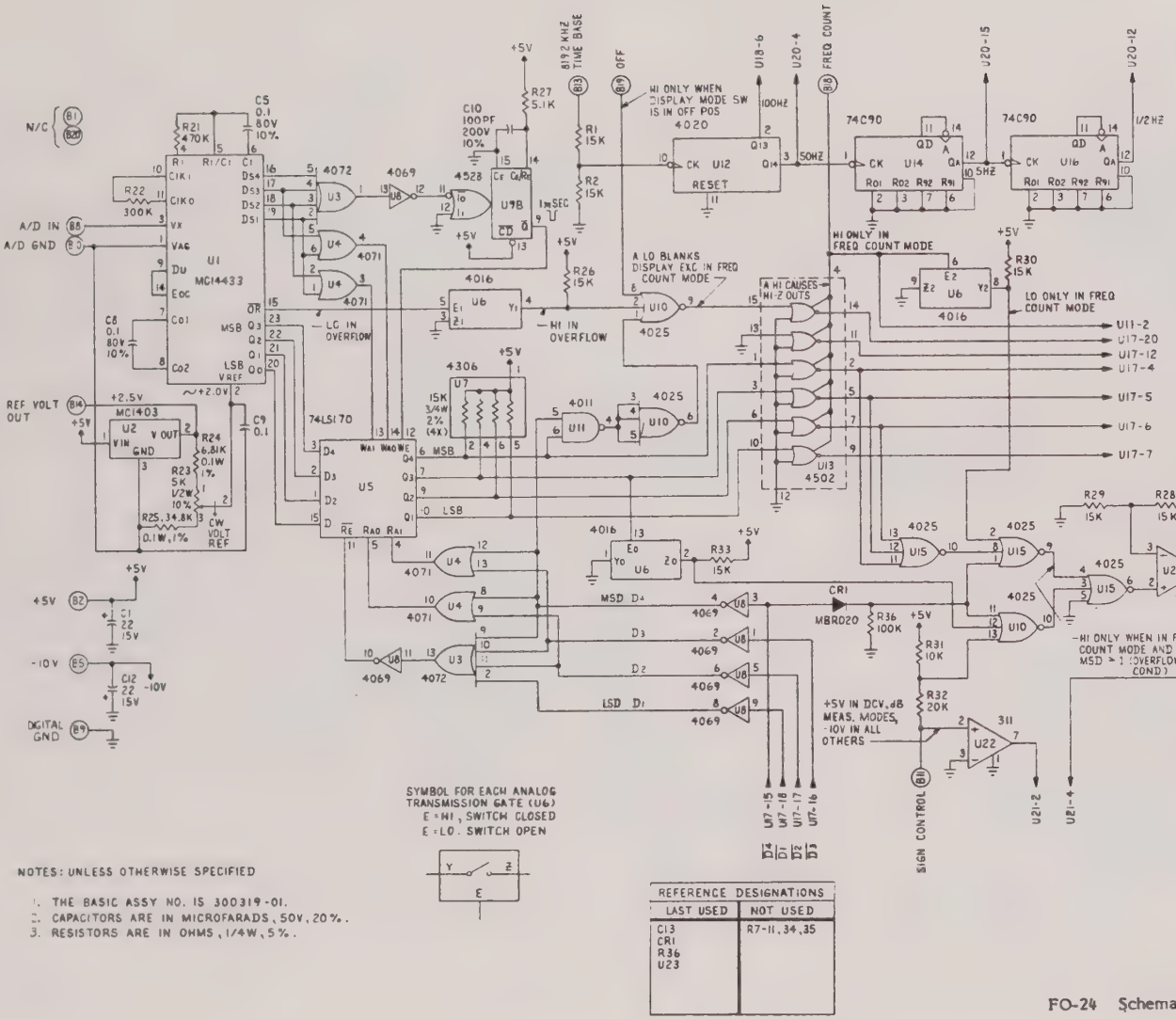

INTEGRATED CIRCUIT CONNECTIONS								
REF DES	DGTL GND	+5V	-10V	+5V DCPLG CAP	-10V DCPLG CAP	NO CONNECTION	VALUE
U1	13	24	12	C6	C11		ALL 0.1 UF
U2						4-8	
U3	7	14				6,9	
U4	7	14					
U5	8	16		C3			
U6	7	14					
U7						3	
U8	7	14					
U9	8	16				6,10	
U10	7	14					
U11	7	14					
U12	8	16				1-7, 9-15	
U13	8	16					
U14	10	5				4,8,9, 13	
U15	7	14					
U16	10	5				4,8,9, 13	
U17	19	24		C4		1-3, 10, 13	
U18	7	14					
U19		1				2	
U20	8	16					
U21						18	
U22		8	4		C13	5,6	
U23	4	8		C7		5,6	

REFERENCE DESIGNATIONS	
LAST USED	NOT USED
C13	R7-11,34,35
CR1	
R36	
U23	

FO-24 Schematic Diagram, Digital, Calibrator (Sheet 1 of 2)

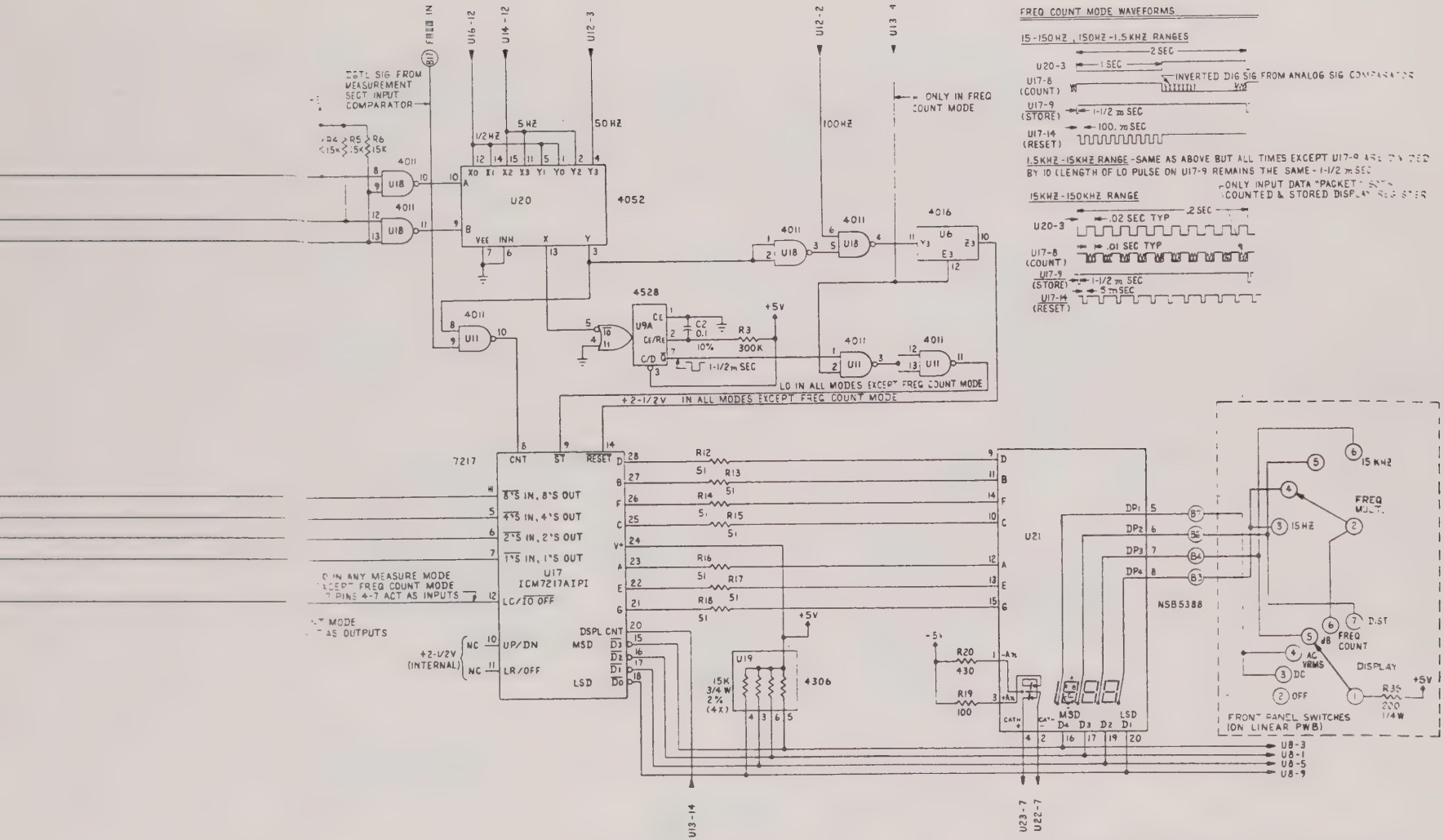

FO-24 Schematic Diagram, Digital, Calibrator (Sheet 2 of 2)

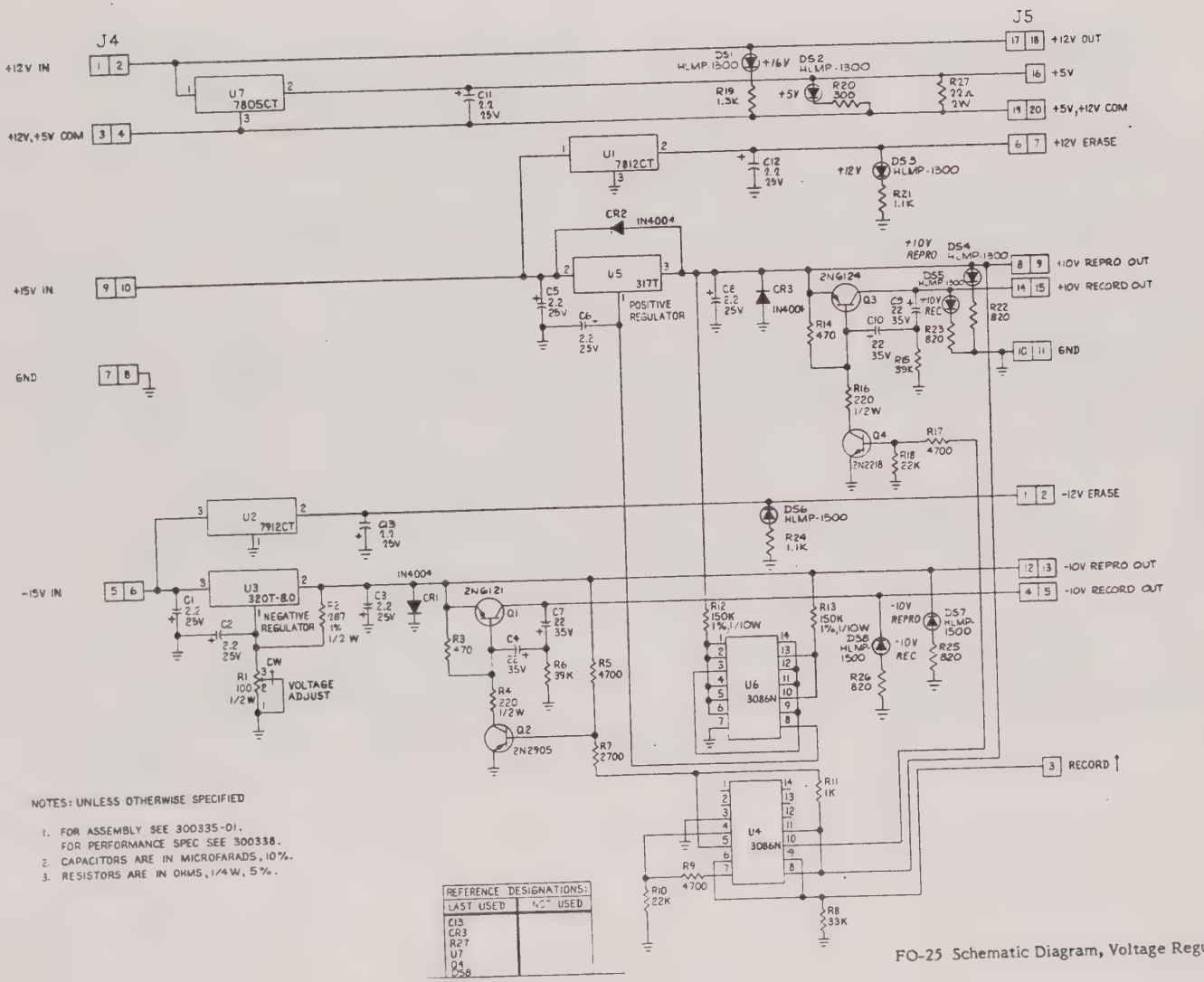

NOTES: UNLESS OTHERWISE SPECIFIED

1. FOR ASSEMBLY SEE 300335-01.
   FOR PERFORMANCE SPEC SEE 300338.
2. CAPACITORS ARE IN MICROFARADS, 10%.
3. RESISTORS ARE IN OHMS, 1/4W, 5%.

REFERENCE DESIGNATIONS:	
LAST USED	NOT USED
C13	
CR3	
R27	
U7	
Q4	
DS8	

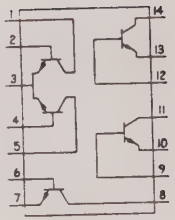

LM3086N
INTERNAL SCHEMATIC
U4, 6

FO-25 Schematic Diagram, Voltage Regulators, Power Supply

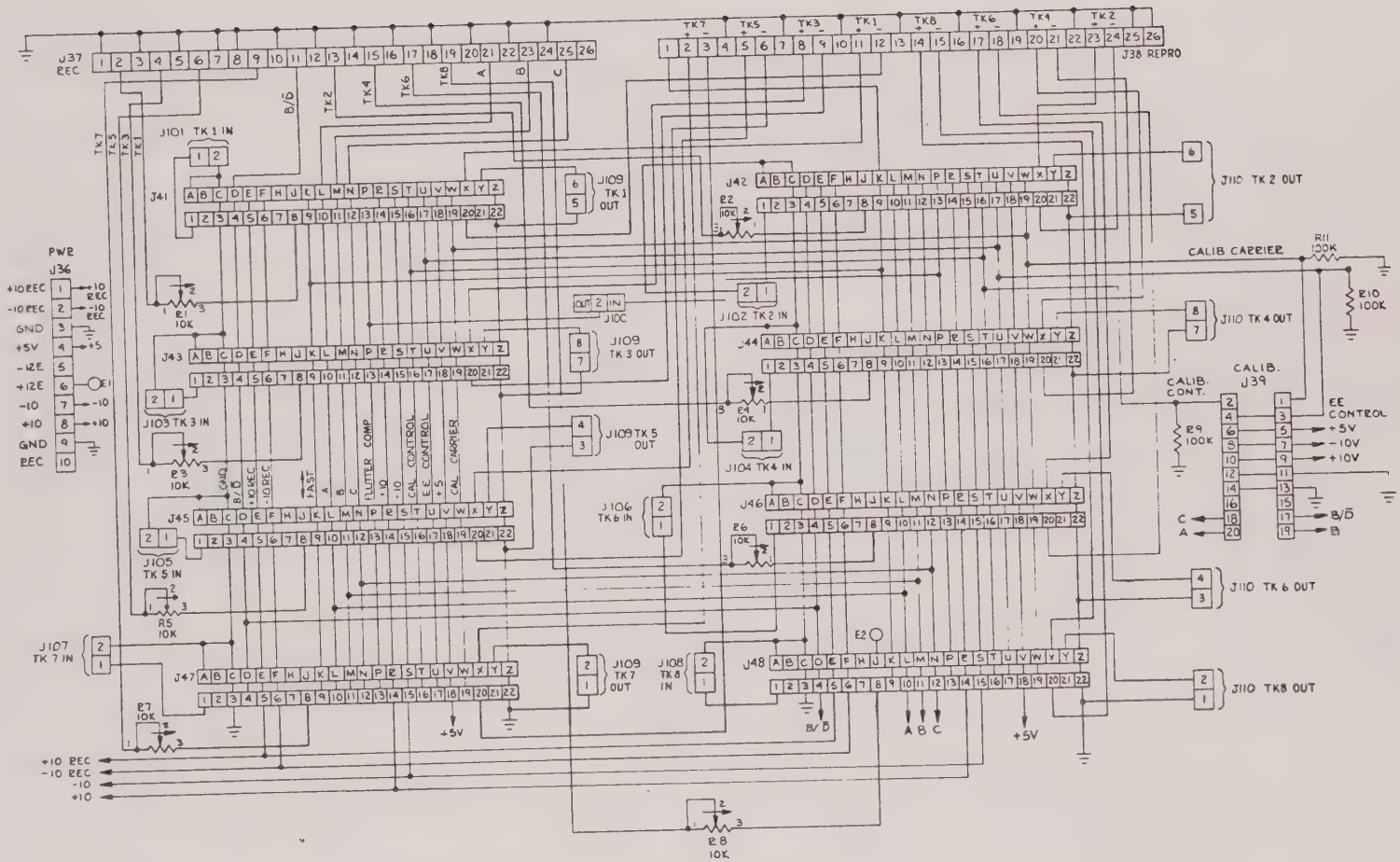

2. RESISTORS ARE IN OHMS, 1/4W, 5%
1. FOR ASSEMBLY 300345.
NOTES: UNLESS OTHERWISE SPECIFIED

FO-26 Schematic Diagram, Card Cage I/C

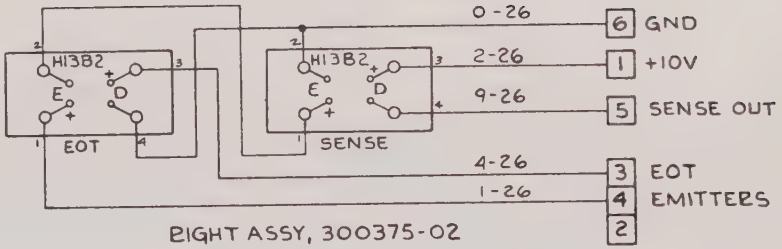

RIGHT ASSY, 300375-02

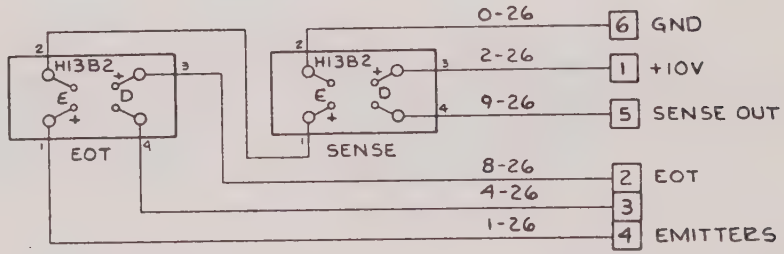

LEFT ASSY, 300375-01

NOTES; UNLESS OTHERWISE SPECIFIED:

1. FOR ASSY SEE 300375.
   FOR PRFM SPEC SEE 300376.

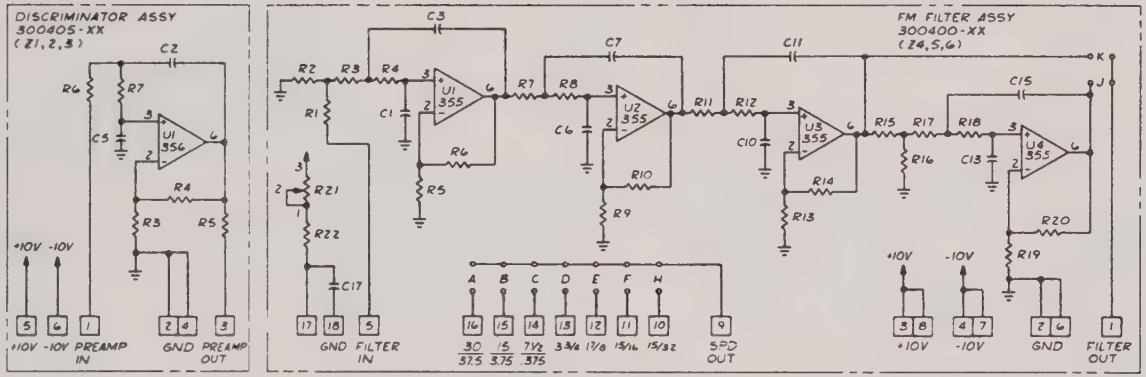

DISCRIMINATOR

LAST USED	NOT USED
R7	R1, 2
C5	C1
U1	—
PIN 6	—

IC CHART					
DEVICE	REF DES	+10V	CAP 0.1 UF	-10V	CAP 0.1 UF
LF 356	U1	7	C3	4	C4

FM FILTER

LAST USED	NOT USED
RZ2	—
C17	—
U4	—
PIN 18	—

IC CHART					
DEVICE	REF DES	+10V	CAP 0.1 UF	-10V	CAP 0.1 UF
LF 355	U1	7	C4	4	C2
LF 355	U2	7	C8	4	C5
LF 355	U3	7	C12	4	C9
LF 355	U4	7	C16	4	C14

NOTES, UNLESS OTHERWISE SPECIFIED:

1. FOR ASSY SEE 300400 & 300405, FOR PRFM SPEC SEE 300252.
2. FOR ALL RESISTOR & CAPACITOR VALUES NOT SHOWN, SEE APPLICABLE PARTS LIST.

FO-28 Schematic Diagram, FM Filter and Discriminator

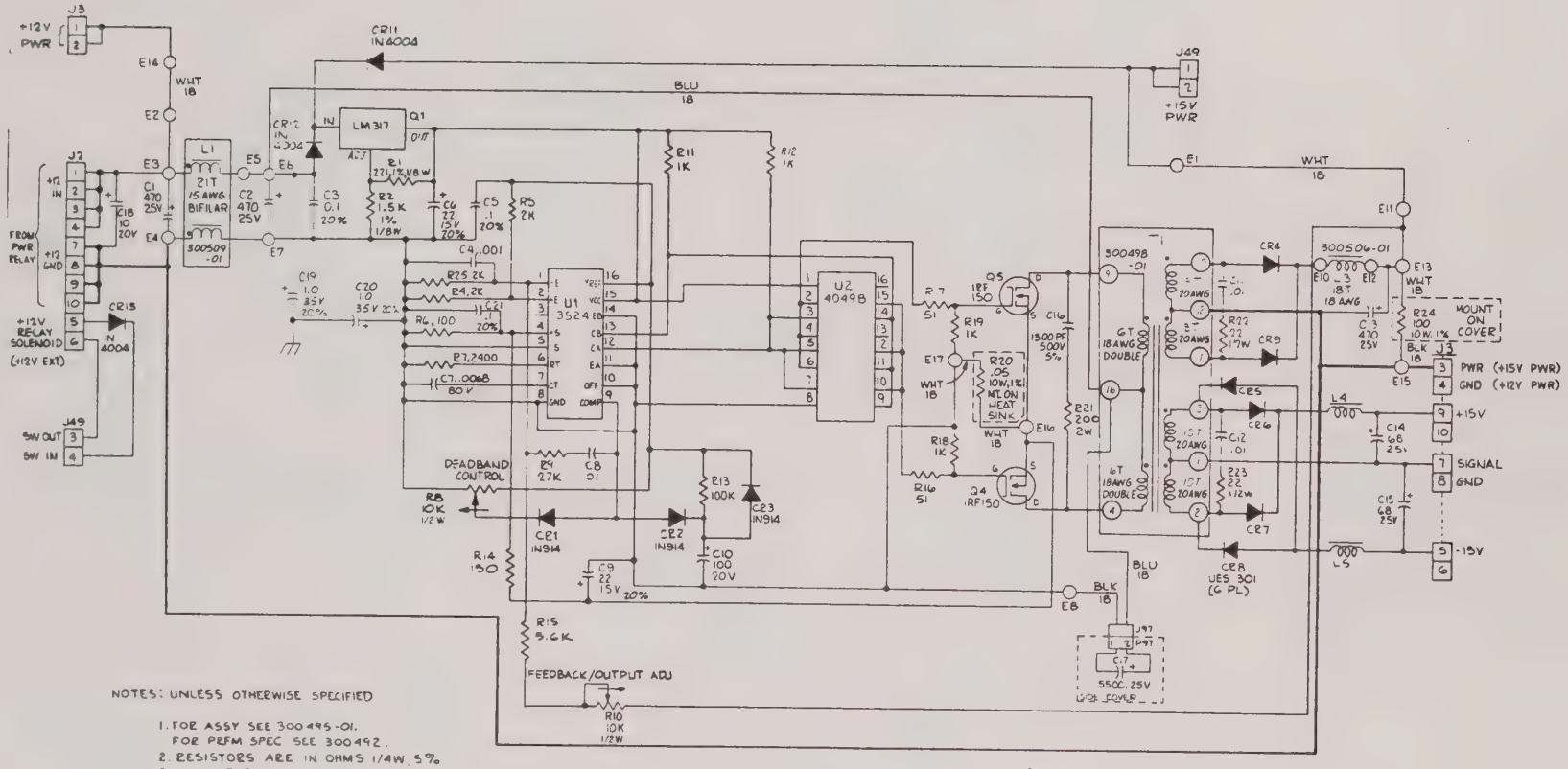

NOTES: UNLESS OTHERWISE SPECIFIED

1. FOR ASSY SEE 300495-01.
   FOR PERM SPEC SEE 300492.
2. RESISTORS ARE IN OHMS 1/4W 5%
3. CAPACITOR ARE IN MICROFARAD, 10%, 50V.

REF DES	
NOT USED	LAST USED
	C21
CR10	CR13
E9	E17
L2	L5
Q2,3	Q5
R3	R25
	T1
	U2

FO-29 Schematic Diagram, DC Preregulator

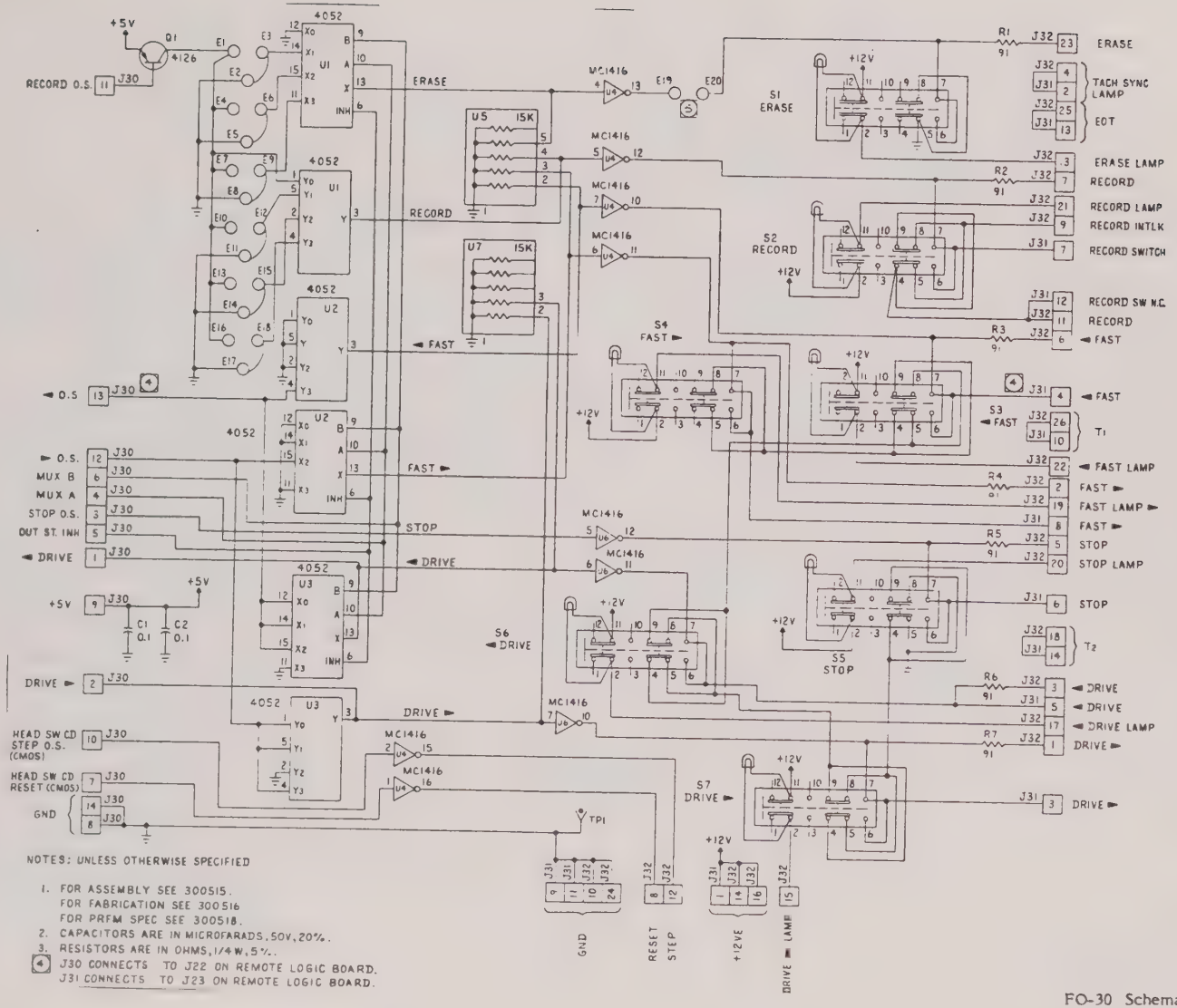

NOTES: UNLESS OTHERWISE SPECIFIED

1. FOR ASSEMBLY SEE 300515.
   FOR FABRICATION SEE 300516
   FOR PRFM SPEC SEE 300518.
2. CAPACITORS ARE IN MICROFARADS, 50V, 20%.
3. RESISTORS ARE IN OHMS, 1/4W, 5%.
4. J30 CONNECTS TO J22 ON REMOTE LOGIC BOARD.
   J31 CONNECTS TO J23 ON REMOTE LOGIC BOARD.

NOTES, CONTINUED:

5. E19 AND E20 ARE NOT USED.

INTEGRATED CIRCUIT CONNECTIONS:

REF DES	TYPE	+5V	GND	NO CONN	BYPASS CAP
U1	4052	16	7,8		C1
U2	4052	16	7,8		C1
U3	4052	16	7,8		C2
U4	MC1416		3,8	9,14	
U5	15K SIP			6	
U6	MC 416		1-4,8	9,13-16	
U7	15K SIP			4-6	

LAST USED	NOT USED
C2	
E20	
Q1	
R7	
S7	
U7	
TP1	

FO-30 Schematic Diagram, Switch PWB-RCU

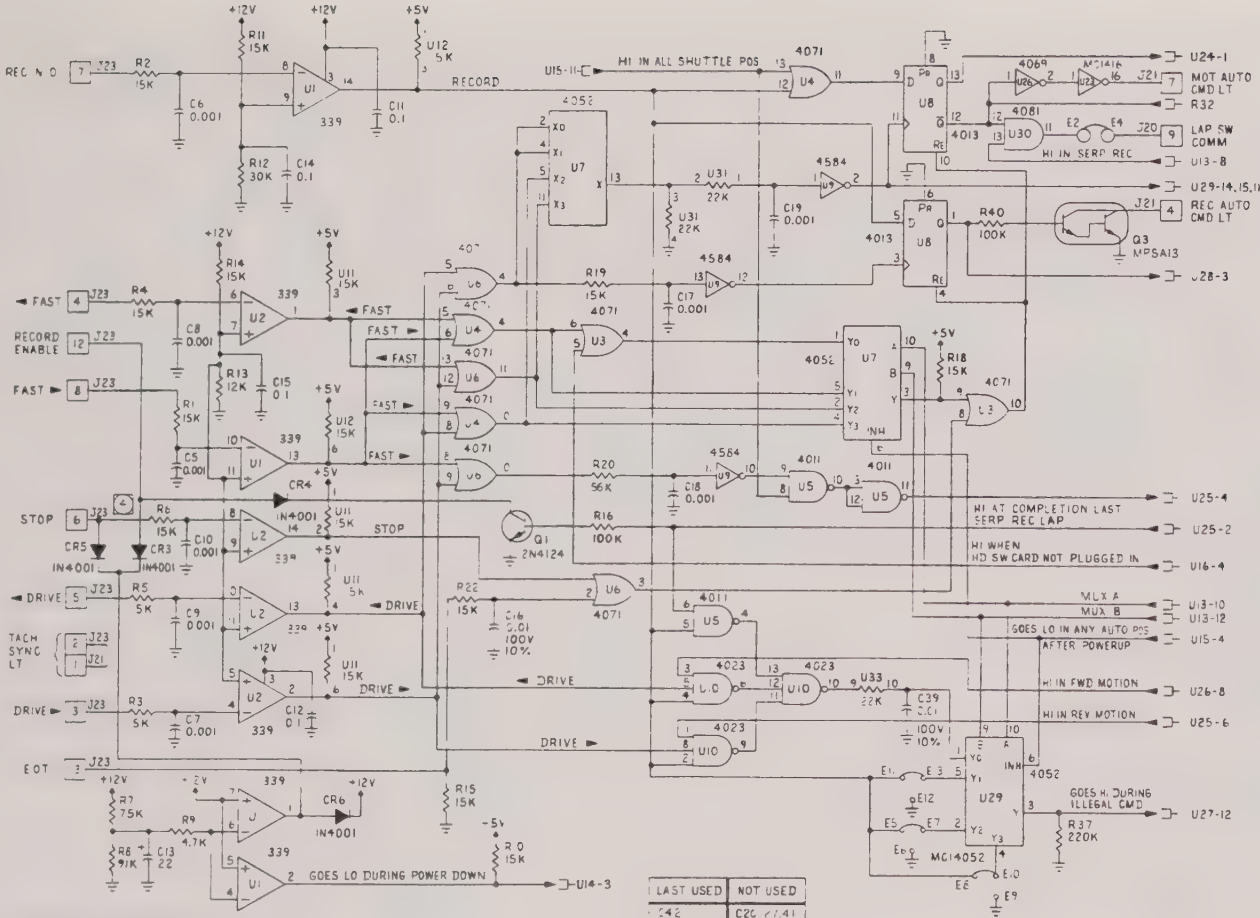

LAST USED	NOT USED
C42	C26 thru C41
CR6	
E19	
Q3	
R42	
U33	

INTEGRATED CIRCUIT CONNECTIONS

REF DES	TYPE	+5V	GND	-24E	NC
U1	339	3	12		
U2	339	3	12		
U3	4071	1, 2, 4	7		
U4	4071	2, 14	7		
U5	4011	14	7		
U6	4071	4	7		
U7	4052	16	8		
U8	4013	14	7		
U9	4584	14	7		
U10	4023	14	7		
U11	2.7K SIP				
U12	2.7K SIP				
U13	4069	14	7		
U14	4023	14, 2, 4	7	8	
U15	4011	14, 2, 4	7		
U16	4052	16	8		
U17	4013	14	7		
U18	4093	14	7		
U19	4538	16	8		
U20	4584	14	7		
U21	4011	14	7		
U22	556	14	7		
U23	MC1416		8		1, 4, 16
U24	4023	11-14	7		
U25	4029	16	8		
U26	4069	14	7	2	
U27	4071	14	8, 6	4	5
U28	4538	16	8	9	
U29	4052	16	8		
U30	4081	1, 2, 8, 9, 14	7		
U31	5K SIP				
U32	5K SIP				
U33	15K SIP	2, 3			

NOTES. UNLESS OTHERWISE SPECIFIED

1. FOR ASSEMBLY SEE 300527-01.
   FOR PERFORMANCE SPEC. SEE
2. CAPACITORS ARE IN MICROFARADS, 50V, 20%.
3. RESISTORS ARE IN OHMS, 1/4W, 5%
4. J20 CONNECTS TO J11 ON FRONT PANEL BOARD.
   J21 CONNECTS TO J12 ON FRONT PANEL BOARD
   J22 CONNECTS TO J30 ON SWITCH CLUSTER BOARD
   J23 CONNECTS TO J31 ON SWITCH CLUSTER BOARD.

FO-31 Schematic Diagram, RCU Logic (Sheet 1 of 3)

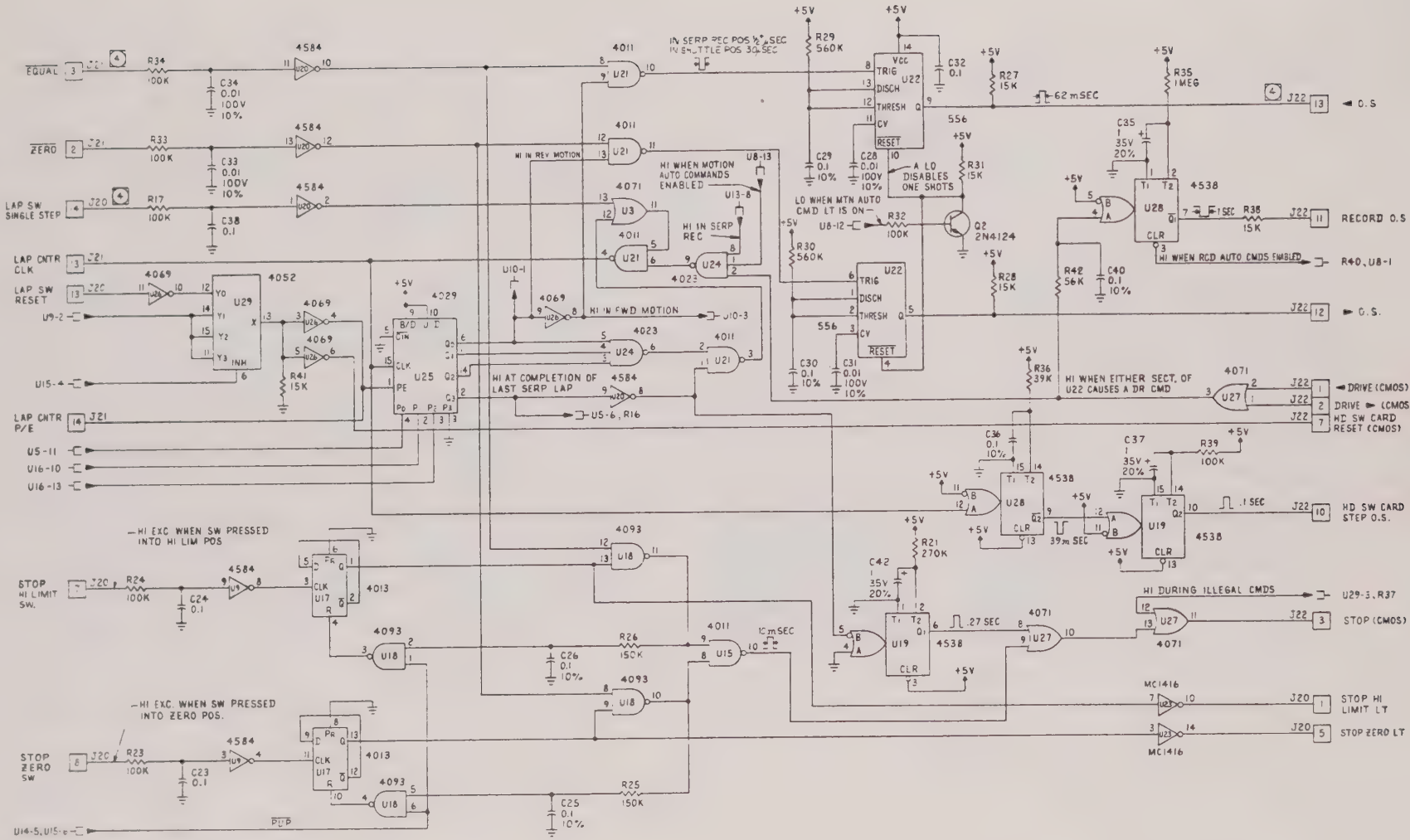

FO-31 Schematic Diagram, RCU Logic (Sheet 2 of 3)

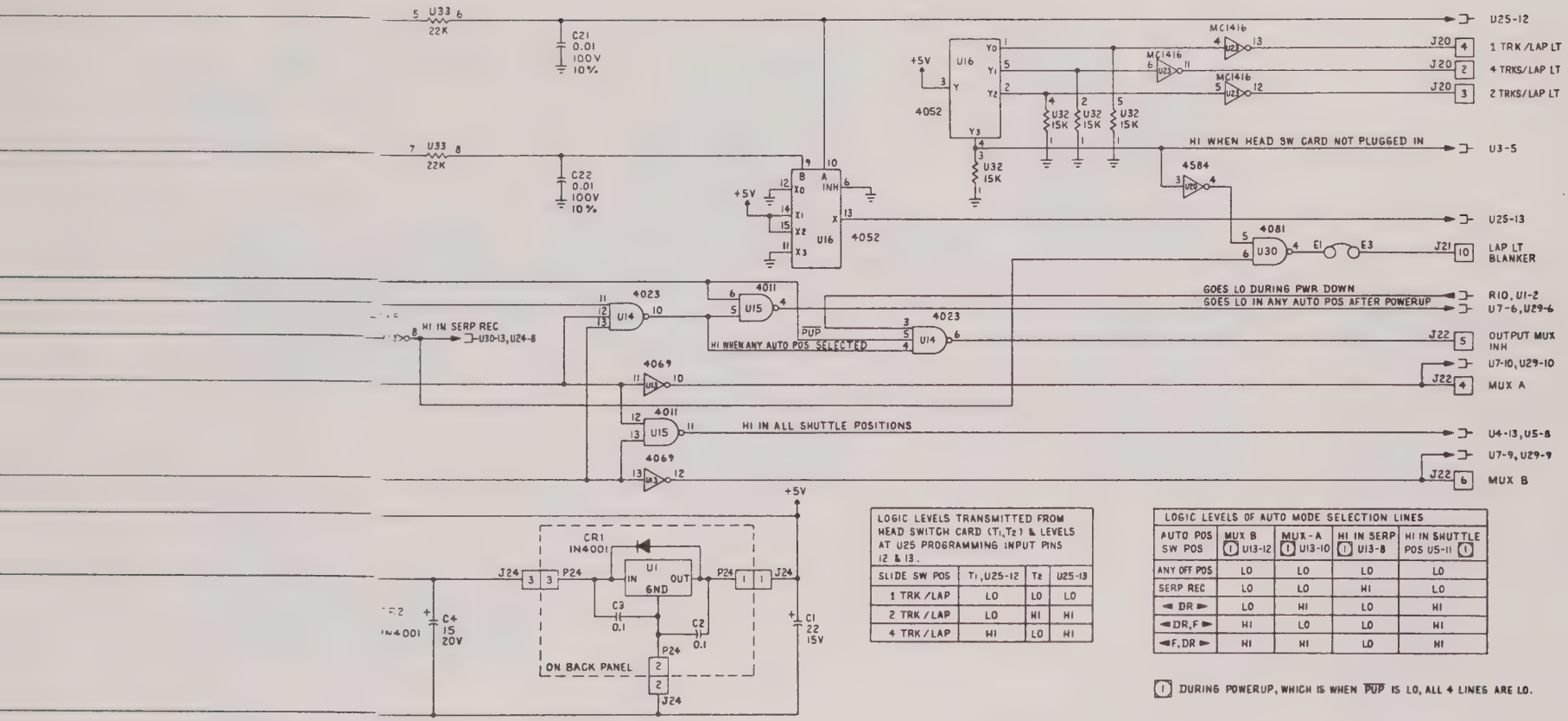

LOGIC LEVELS TRANSMITTED FROM HEAD SWITCH CARD (T_1,T_2) & LEVELS AT U25 PROGRAMMING INPUT PINS 12 & 13.			
SLIDE SW POS	T_1, U25-12	T_2	U25-13
1 TRK/LAP	LO	LO	LO
2 TRK/LAP	LO	HI	HI
4 TRK/LAP	HI	LO	HI

LOGIC LEVELS OF AUTO MODE SELECTION LINES				
AUTO POS SW POS	MUX B (1) U13-12	MUX-A (1) U13-10	HI IN SERP (1) U13-8	HI IN SHUTTLE POS U5-11 (1)
ANY OFF POS	LO	LO	LO	LO
SERP REC	LO	LO	HI	LO
◄ DR ►	LO	HI	LO	HI
◄ DR,F ►	HI	LO	LO	HI
◄ F,DR ►	HI	HI	LO	HI

(1) DURING POWERUP, WHICH IS WHEN $\overline{PUP}$ IS LO, ALL 4 LINES ARE LO.

FO-31 Schematic Diagram, RCU Logic (Sheet 3 of 3)

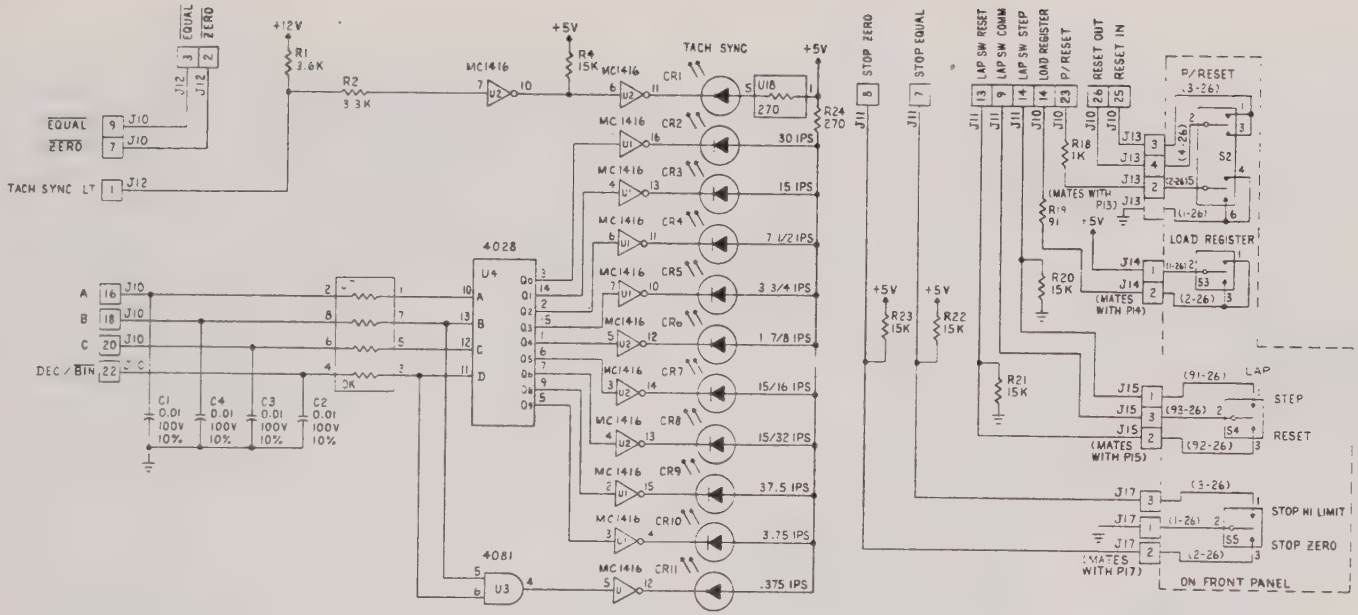

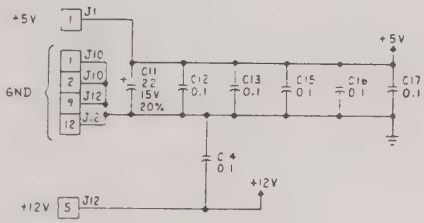

NOTES: UNLESS OTHERWISE SPECIFIED
1. INTERPRET DRAWING IN ACCORDANCE WITH MIL-STD-100.
2. FOR ASSEMBLY SEE 300520
   FOR FABRICATION SEE 300521
   FOR PRFM SPEC SEE 300523.
3. CAPACITORS ARE IN MICROFARADS, 50 V, 20%
4. RESISTORS ARE IN OHMS, 1/4W, 5%
5. LED'S: CR1-11, 13-16 ARE COLOR YELLOW (HLMP-1400).
   CR12, 17, 18 ARE COLOR RED (HLMP-1300).
6. J12 CONNECTS TO J21 ON REMOTE LOGIC BOARD.
   J11 CONNECTS TO J20 ON REMOTE LOGIC BOARD

LAST USED	NOT USED
C7 CR19 R24 U24	R3,5,6 U5,6

INTEGRATED CIRCUIT CONNECTIONS:

REF DES	TYPE	GND	+5V	NO CONN
U1	MC1416	8	9	
U2	MC1416	8	9	1,2,15,16
U3	4081	1,2,7-9,12,13	14	3,10,11
U4	4028	8	16	4
U5				
U6				
U7	6K SIP			
U8	10K SIP			
U9	82Ω DIP			
U10	10K SIP			
U11	4069	1,3,7	14	2,4
U12	MC1416	8	9	5-7,10-12
U13	MC1416	8	9	
U14	560Ω DIP			
U15	4511	8	16	
U16	4029	8	16	7
U17	MDSP3530			3-6,9,12
U18	270Ω SIP		1	2,3
U19	100K SIP			
U20	100K SIP	1		5
U21	4584	7	14	10
U22	4081	7-9,12,13	14	10,11
U23	NSB3881			1,4,5,9
U24	4511	8	16	

FO-32 Schematic Diagram, RCU Front Panel PWB (Sheet 1 of 3)

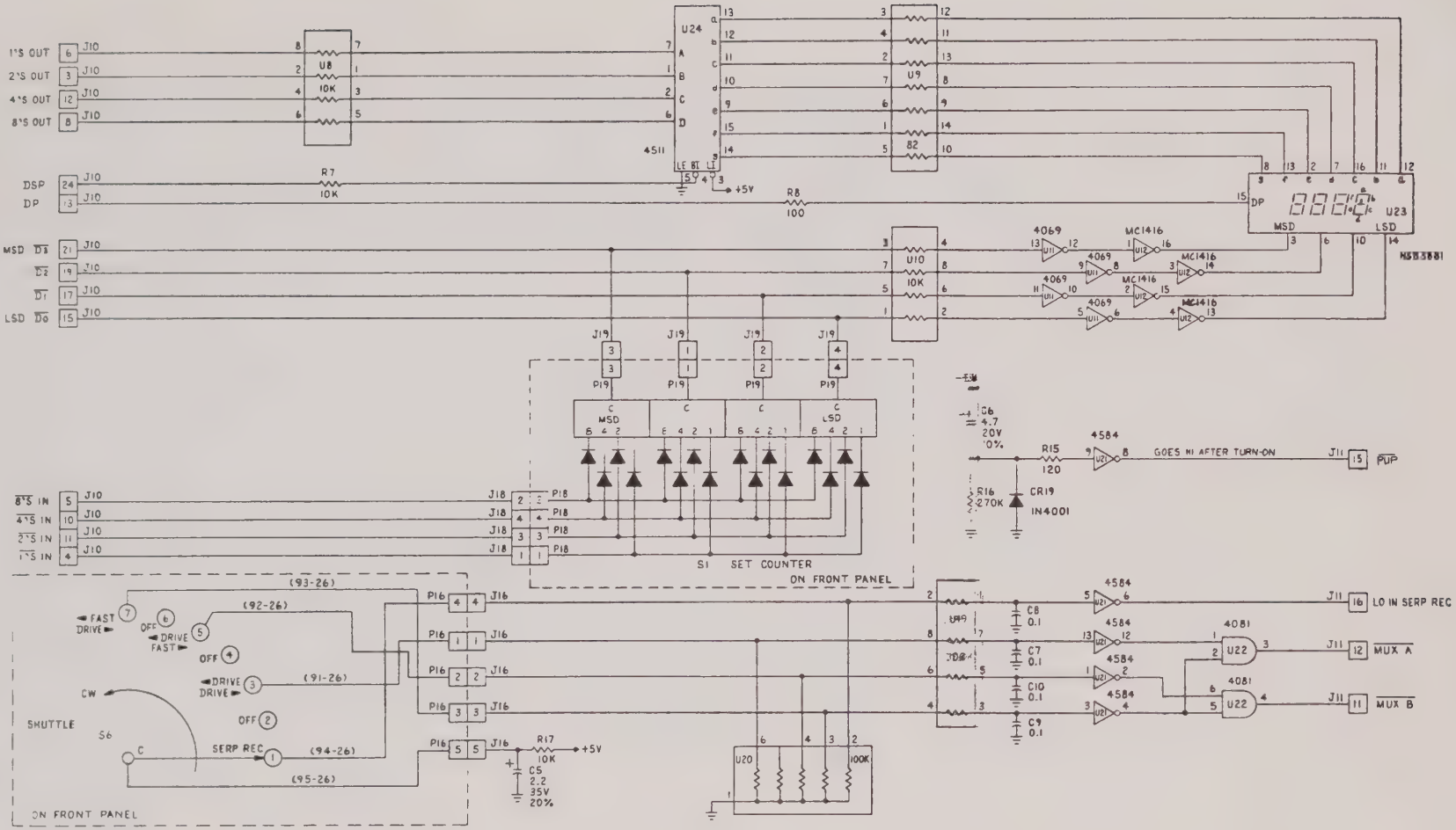

FO-1 Schematic Diagram, RCU Front Panel PWB (Sheet 2 of 3)

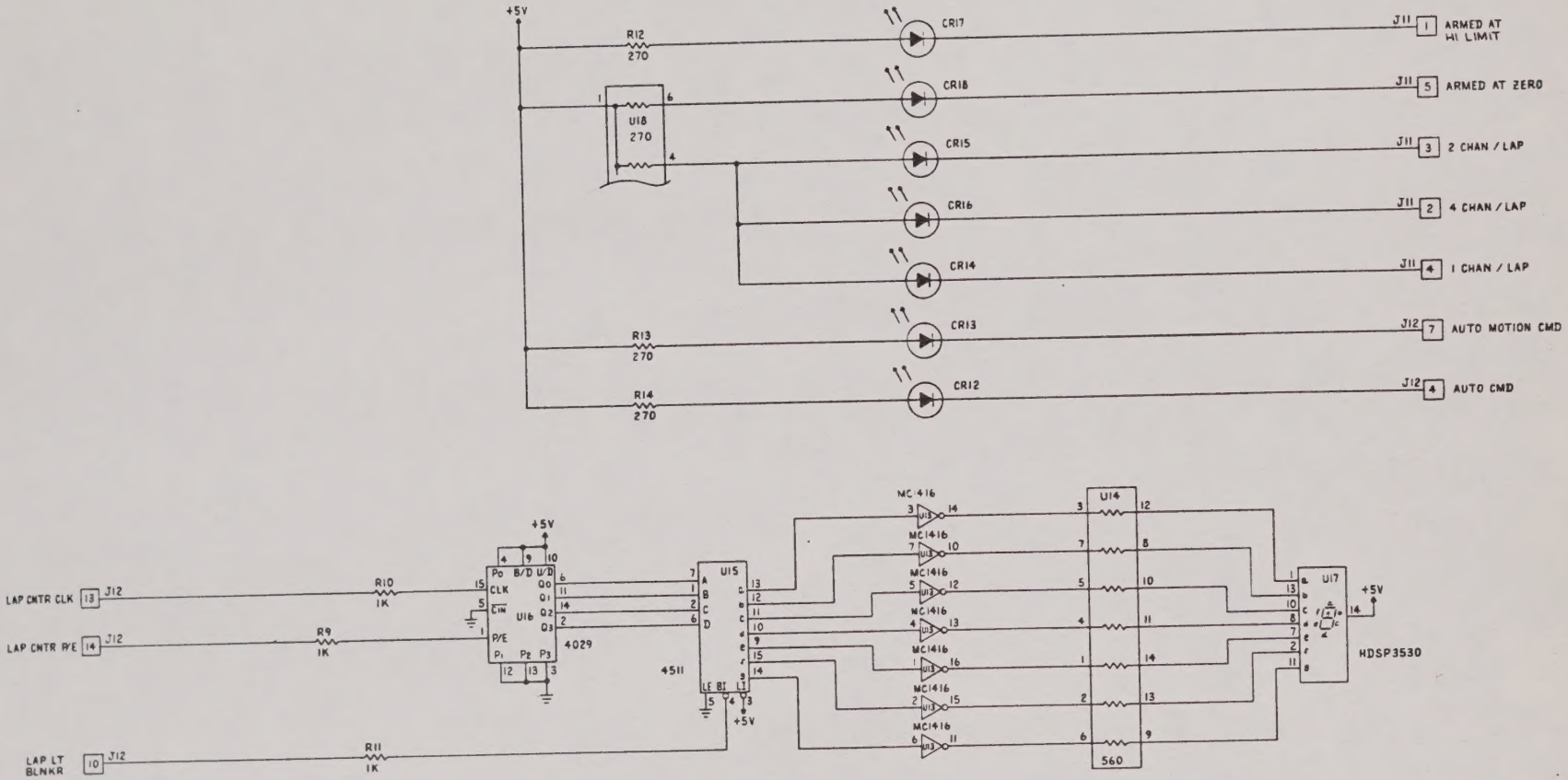

FO-32 Schematic Diagram, RCU Front Panel PWB (Sheet 3 of 3)

MP MASTER
MA34579

Gould Inc., Recording Systems Division
3631 Perkins Avenue, Cleveland, Ohio 44114
Telephone (216) 361-3315

GOULD
Electronics